Board Size should be 7 X 8 inches
Group similar connections together (ENET, USB, UART, etc)

Jumpers and switches need to be organized
in functional groups and labeled
with legible font. We will be adding
tables to the silk screen to show positions.

Need Vias for mounting 55001503-01
LCD kit in upper right hand corner

Please mark all pin 1 locations for interfaces connectors.

Line up ZIF (LCD) connectors on the module with
ZIF (LCD) connector on the Dev Board

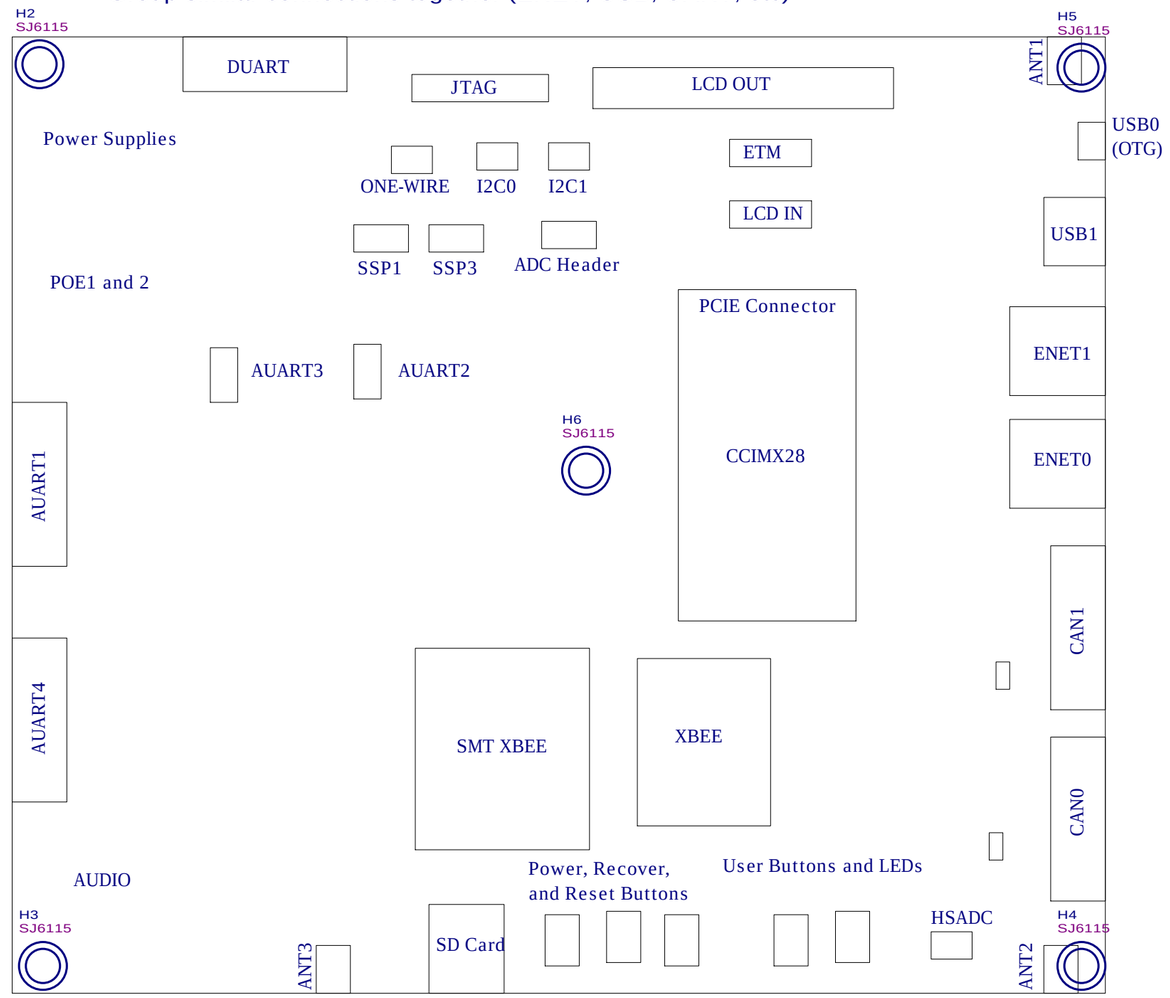

Feet should go on bottom of board in the center and corners

REV	ECO	DESCRIPTION OF CHANGE	BY	CKD	APPR	DATE

APPROVALS:	DATE:
DESIGNED:	09/15/11
DRAWN:	xx/xx/xx
CHECKED:	xx/xx/xx
ENGINEER:	Scott McCall

© Digi International Inc.
All rights reserved

TITLE
Dev Board for CC IMX28
Mechanicals

PART NO. 55001676-01
REV. C

DO NOT SCALE DRAWING
SHEET 1 of 25

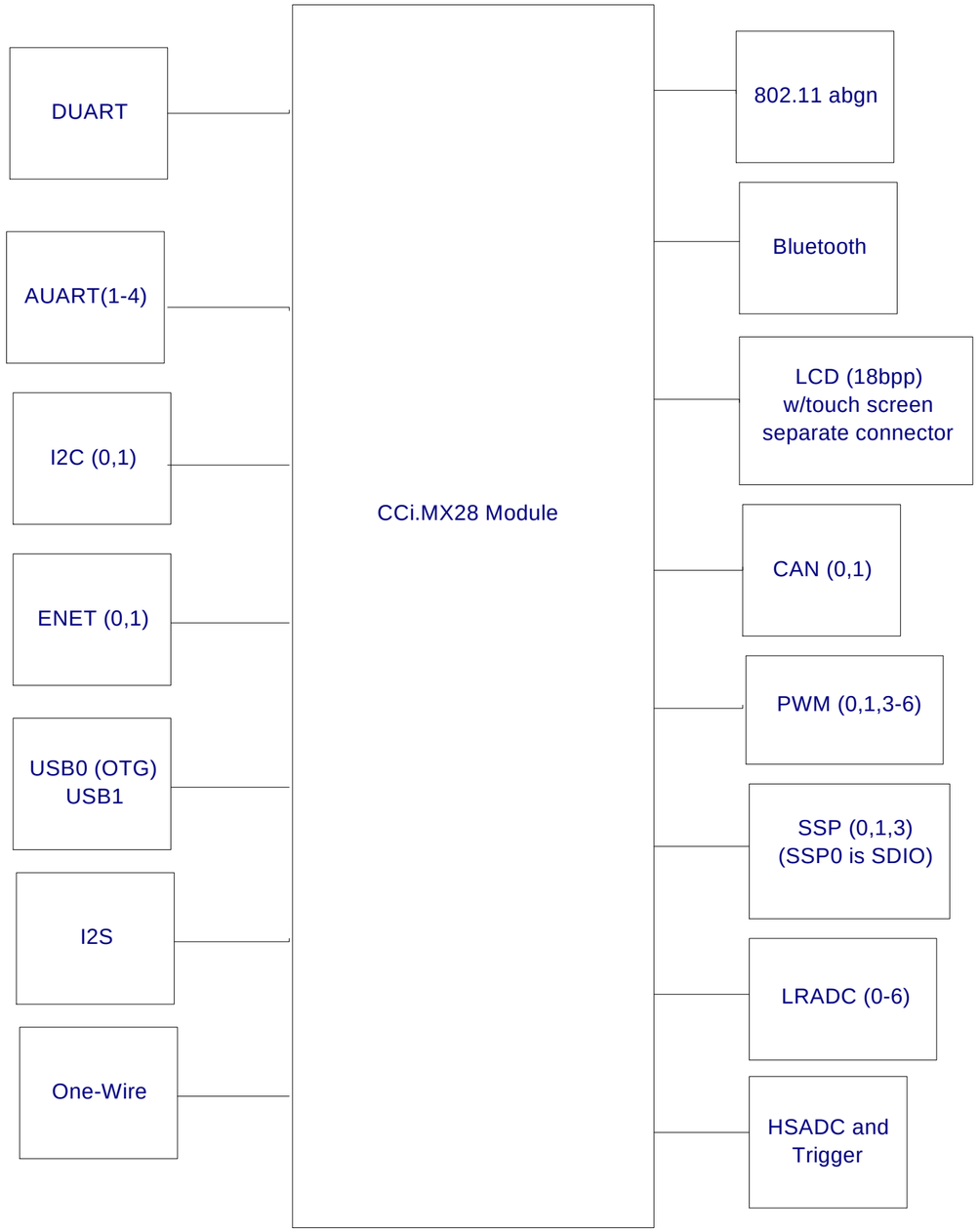

Main features of each variant. See Hardware Reference manual for more information on available interfaces in each variant.

SKU	i.MX	FLASH	RAM	ENETS	802.11 abgn	BT	JTAG	LCD	1-Wire
CC_WMX_PF58_TK_JT	287	256MB	256MB	2	Y	Y	Y	Y	Y
CC_WMX_PF58_TK_B	287	256MB	256MB	2	Y	Y	Y	Y	N
CC_WMX_PF58_TK	287	256MB	256MB	2	Y	Y	Y	Y	N
CC_WMX_PF47_VM_B	287	128MB	128MB	1	Y	N	Y	Y	N
CC_WMX_PF47_VM	287	128MB	128MB	1	Y	N	Y	Y	N
CC_WMX_PF47_ZM_B	287	128MB	128MB	1	N	N	Y	Y	N
CC_WMX_PF47_ZM	287	128MB	128MB	1	N	N	Y	Y	N
CC_WMX_PE47_VE_B	280	128MB	128MB	0	Y	N	N	N	N
CC_WMX_PE47_VE	280	128MB	128MB	0	Y	N	N	N	N
CC_WMX_PE47_VM_JT	280	128MB	128MB	1	Y	N	Y	N	N
CC_WMX_PE47_VM	280	128MB	128MB	1	Y	N	Y	N	N
CC_WMX_PE47_ZM_B	280	128MB	128MB	1	N	N	N	N	N
CC_WMX_PE47_ZM	280	128MB	128MB	1	N	N	N	N	N

REV	ECO	DESCRIPTION OF CHANGE	BY	CKD	APPR	DATE

APPROVALS:	DATE:	TITLE: Dev Board for CC IMX28 Block Diagram
DESIGNED:	09/15/11	
DRAWN:	xx/xx/xx	
CHECKED:	xx/xx/xx	
ENGINEER:	Scott McCall	PART NO. 55001676-01 — REV. C

© Digi International Inc.
All rights reserved

DO NOT SCALE DRAWING

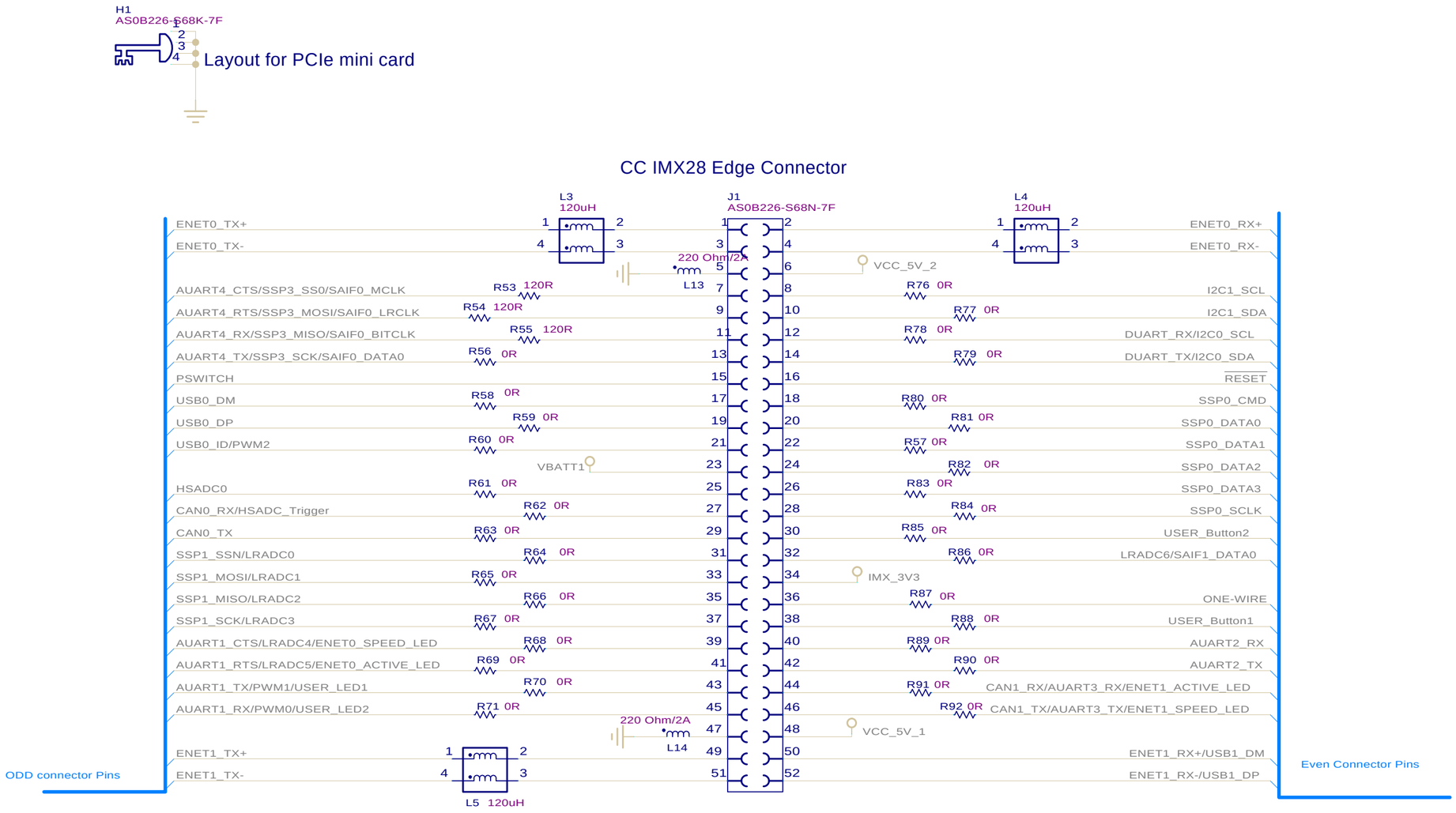

The zero ohm resistors are to allow disconnection of various portions of the DEV board from the module.
This will allow developement to go forward while the DEV board is being updated (should updates be required).

Do not put traces into the board under the module connectors.
We need to have copper fill with vias on each layer of the PCB
for thermal management.

REV	ECO	DESCRIPTION OF CHANGE	BY	CKD	APPR	DATE

APPROVALS:	DATE:
DESIGNED:	09/15/11
DRAWN:	xx/xx/xx
CHECKED:	xx/xx/xx
ENGINEER:	Scott McCall

TITLE
Dev Board for CC IMX28
Edge Connector

PART NO. 55001676-01
REV. C

© Digi International Inc.
All rights reserved

DO NOT SCALE DRAWING

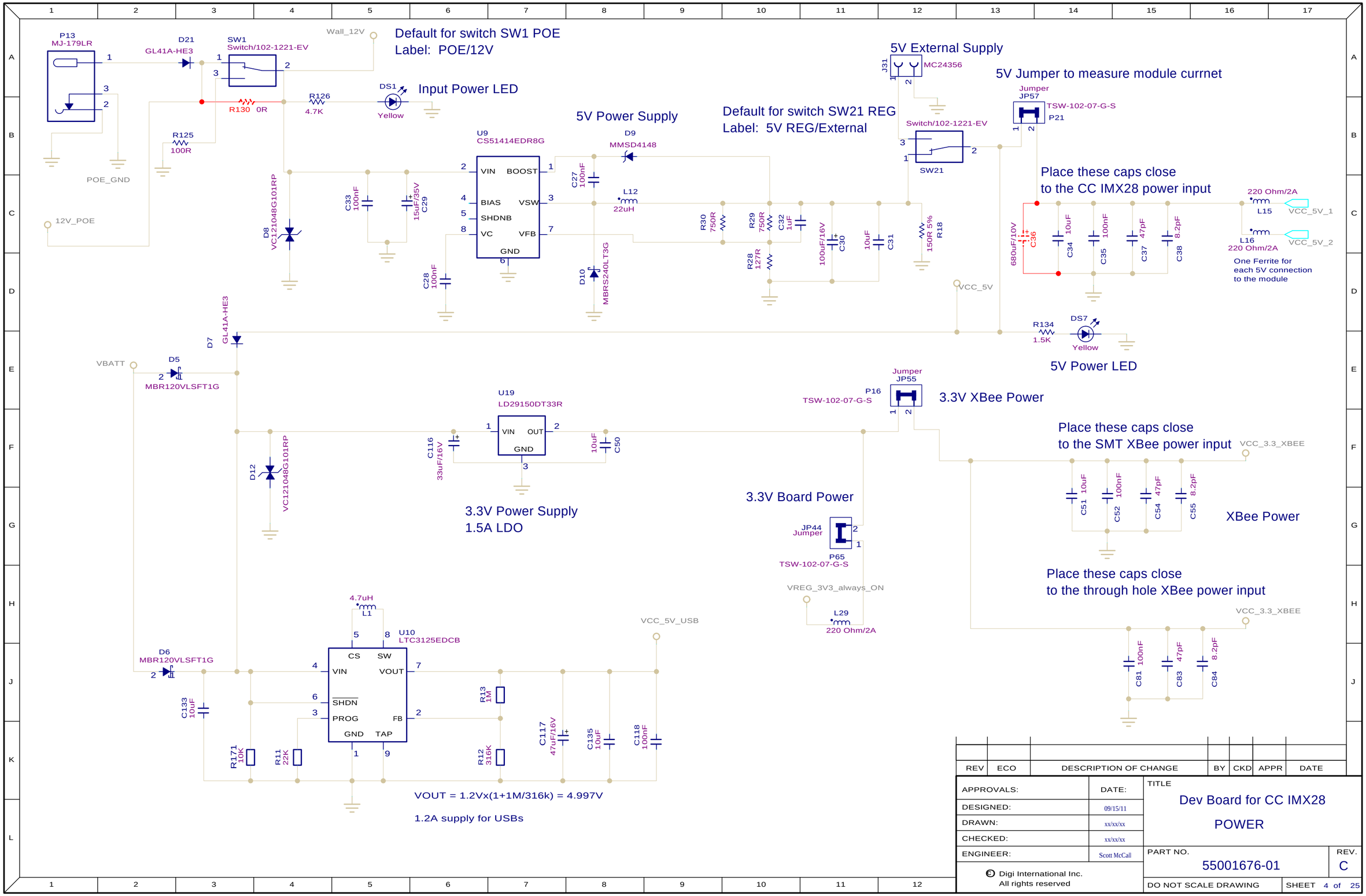

REV	ECO	DESCRIPTION OF CHANGE	BY	CKD	APPR	DATE

APPROVALS:	DATE:
DESIGNED:	09/15/11
DRAWN:	xx/xx/xx
CHECKED:	xx/xx/xx
ENGINEER:	Scott McCall

© Digi International Inc.
All rights reserved

TITLE
Dev Board for CC IMX28
POWER

PART NO. 55001676-01
REV. C

DO NOT SCALE DRAWING
SHEET 4 of 25

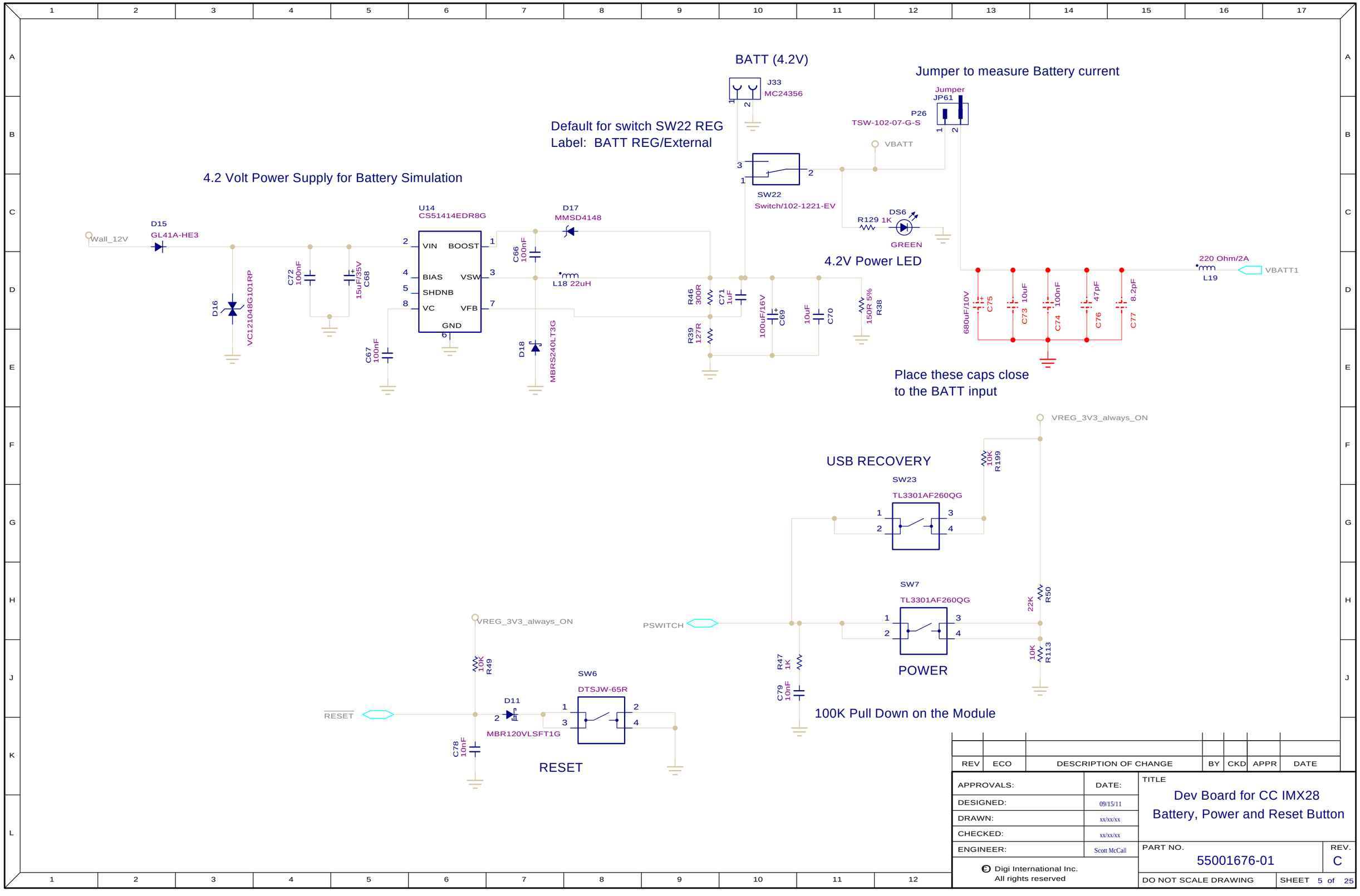

REV	ECO	DESCRIPTION OF CHANGE	BY	CKD	APPR	DATE

APPROVALS:	DATE:
DESIGNED:	09/15/11
DRAWN:	xx/xx/xx
CHECKED:	xx/xx/xx
ENGINEER:	Scott McCall

TITLE
Dev Board for CC IMX28
Battery, Power and Reset Button

PART NO. 55001676-01
REV. C

© Digi International Inc.
All rights reserved

DO NOT SCALE DRAWING

This switch is included to remove all 3.3V inputs
to the CCIMX28 during reset should the need arise

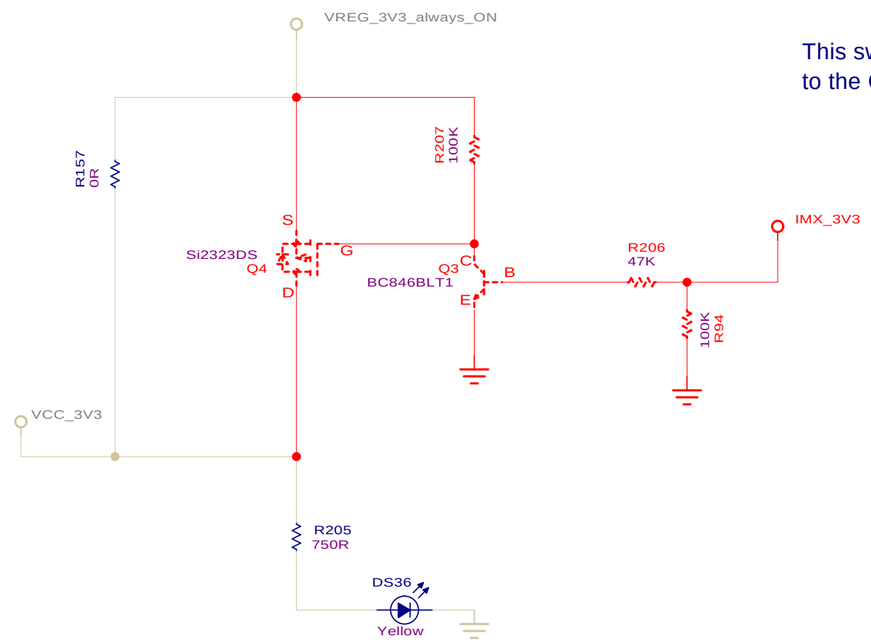

3.3V Power LED

REV	ECO	DESCRIPTION OF CHANGE	BY	CKD	APPR	DATE

APPROVALS:	DATE:
DESIGNED:	09/15/11
DRAWN:	xx/xx/xx
CHECKED:	xx/xx/xx
ENGINEER:	Scott McCall

© Digi International Inc.
All rights reserved

TITLE
Dev Board for CC IMX28

3.3V LDO Switch

PART NO. 55001676-01

REV. C

DO NOT SCALE DRAWING

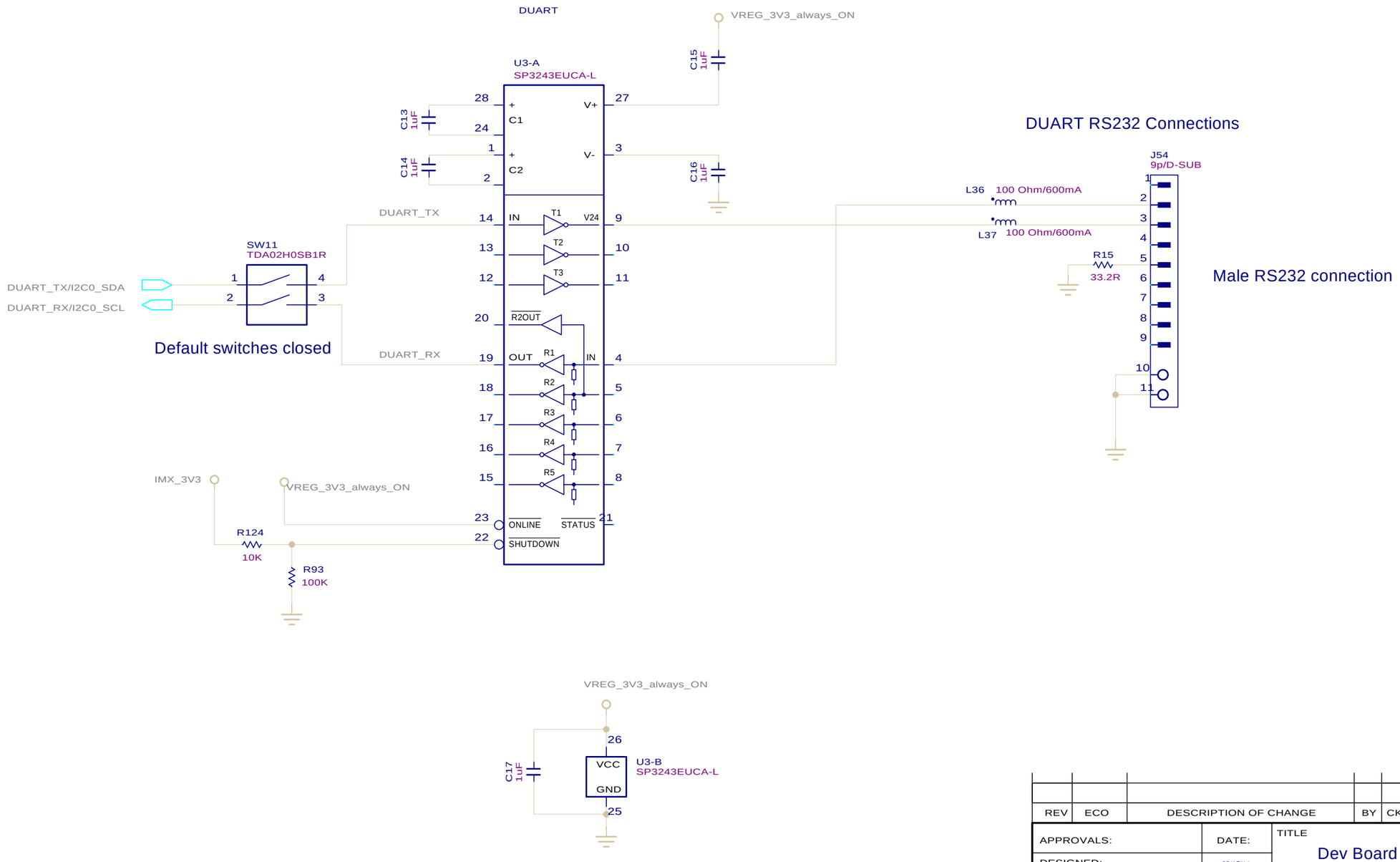

REV	ECO	DESCRIPTION OF CHANGE	BY	CKD	APPR	DATE

APPROVALS:	DATE:
DESIGNED:	09/15/11
DRAWN:	xx/xx/xx
CHECKED:	xx/xx/xx
ENGINEER:	Scott McCall

TITLE
Dev Board for CC IMX28
DUART RS232

PART NO. 55001676-01
REV. C

© Digi International Inc.
All rights reserved

DO NOT SCALE DRAWING

AUART 1 is only available in the following Variants:
CC-WMX-PF58-TK-JT
CC-WMX-PF58-TK-B
CC-WMX-PF58-TK
CC-WMX-PF47-VM-B
CC-WMX-PF47-VM
CC-WMX-PE47-ZM

In Addition CTS and RTS share with
LRADC4 and LRADC5 (see jumper page)

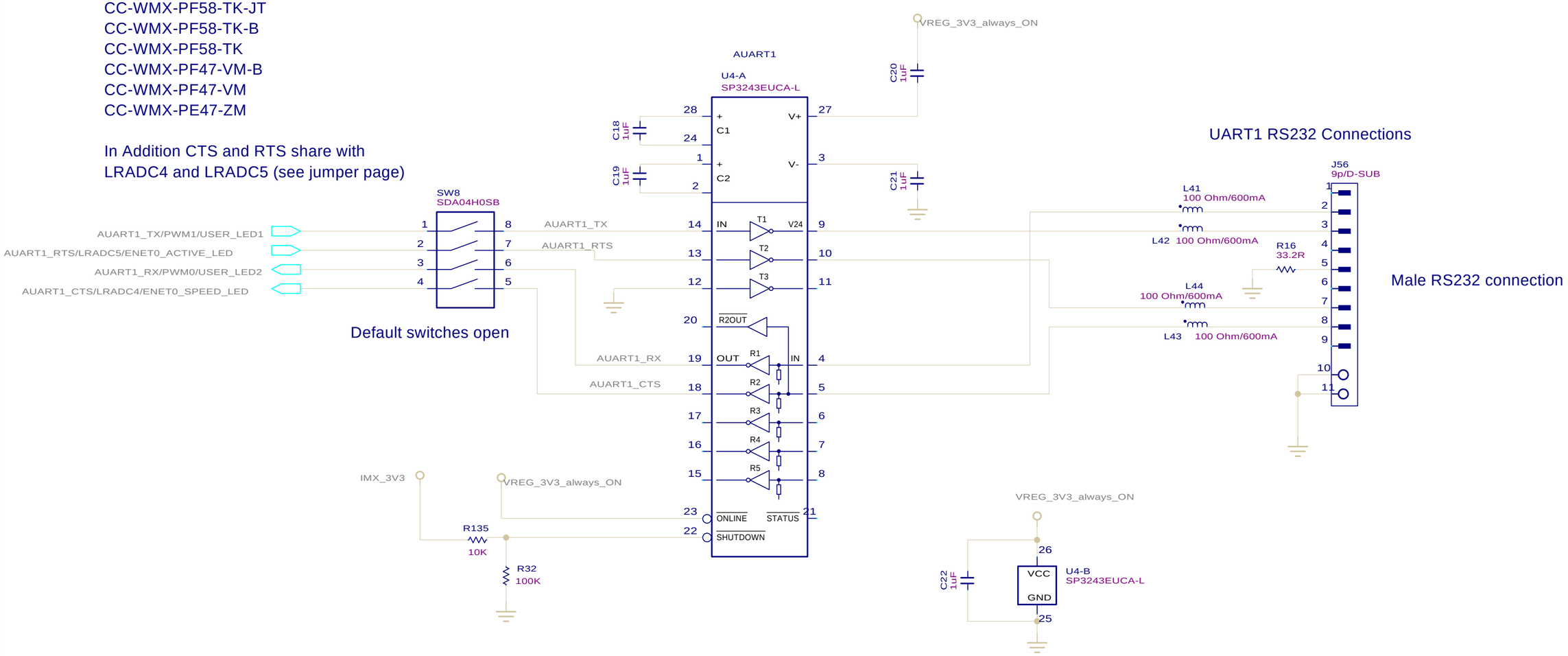

REV	ECO	DESCRIPTION OF CHANGE	BY	CKD	APPR	DATE

APPROVALS:	DATE:
DESIGNED:	09/15/11
DRAWN:	xx/xx/xx
CHECKED:	xx/xx/xx
ENGINEER:	Scott McCall

© Digi International Inc.
All rights reserved

TITLE
Dev Board for CC IMX28
AUART1_RS232

PART NO. 55001676-01
REV. C

DO NOT SCALE DRAWING

AUART4 shares with SSP3 (see jumper page) for the following variants:
CC-WMX-PF58-TK-JT
CC-WMX-PF58-TK-B
CC-WMX-PF58-TK
CC-WMX-PF47-VM-B
CC-WMX-PF47-VM
CC-WMX-PE47-ZM

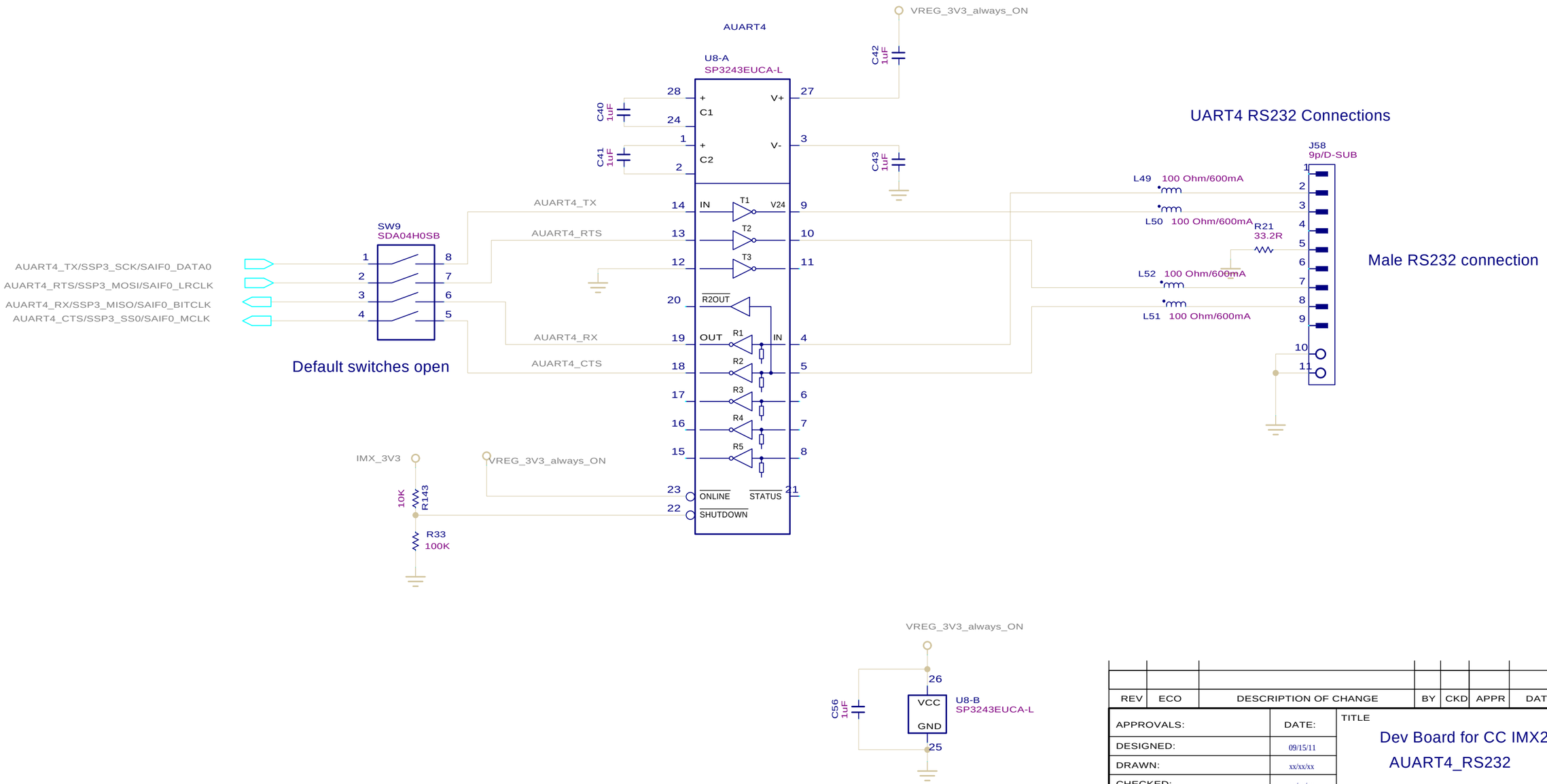

REV	ECO	DESCRIPTION OF CHANGE	BY	CKD	APPR	DATE

APPROVALS:	DATE:
DESIGNED:	09/15/11
DRAWN:	xx/xx/xx
CHECKED:	xx/xx/xx
ENGINEER:	Scott McCall

© Digi International Inc.
All rights reserved

TITLE
Dev Board for CC IMX28
AUART4_RS232

PART NO. 55001676-01
REV. C

DO NOT SCALE DRAWING

UART Headers

UARTS are TTL level

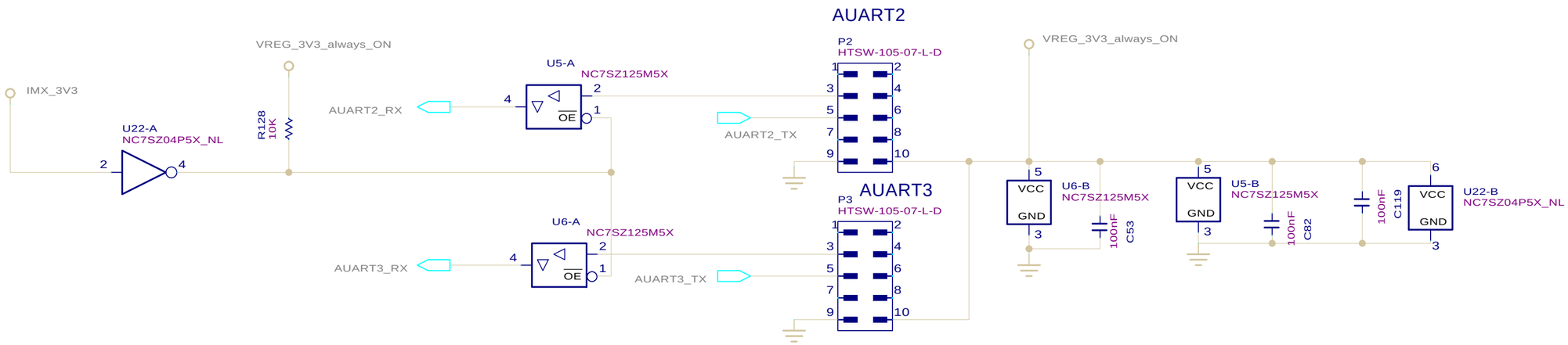

AUART3 is shared with CAN1 and ENET1 LEDs

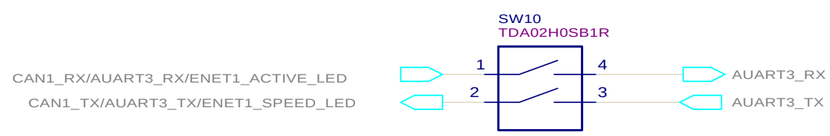

Default switches open

REV	ECO	DESCRIPTION OF CHANGE	BY	CKD	APPR	DATE

APPROVALS:	DATE:
DESIGNED:	09/15/11
DRAWN:	xx/xx/xx
CHECKED:	xx/xx/xx
ENGINEER:	Scott McCall

© Digi International Inc.
All rights reserved

TITLE
Dev Board for CC IMX28
UART Headers

PART NO. 55001676-01

REV. C

DO NOT SCALE DRAWING

SHEET 10of 25

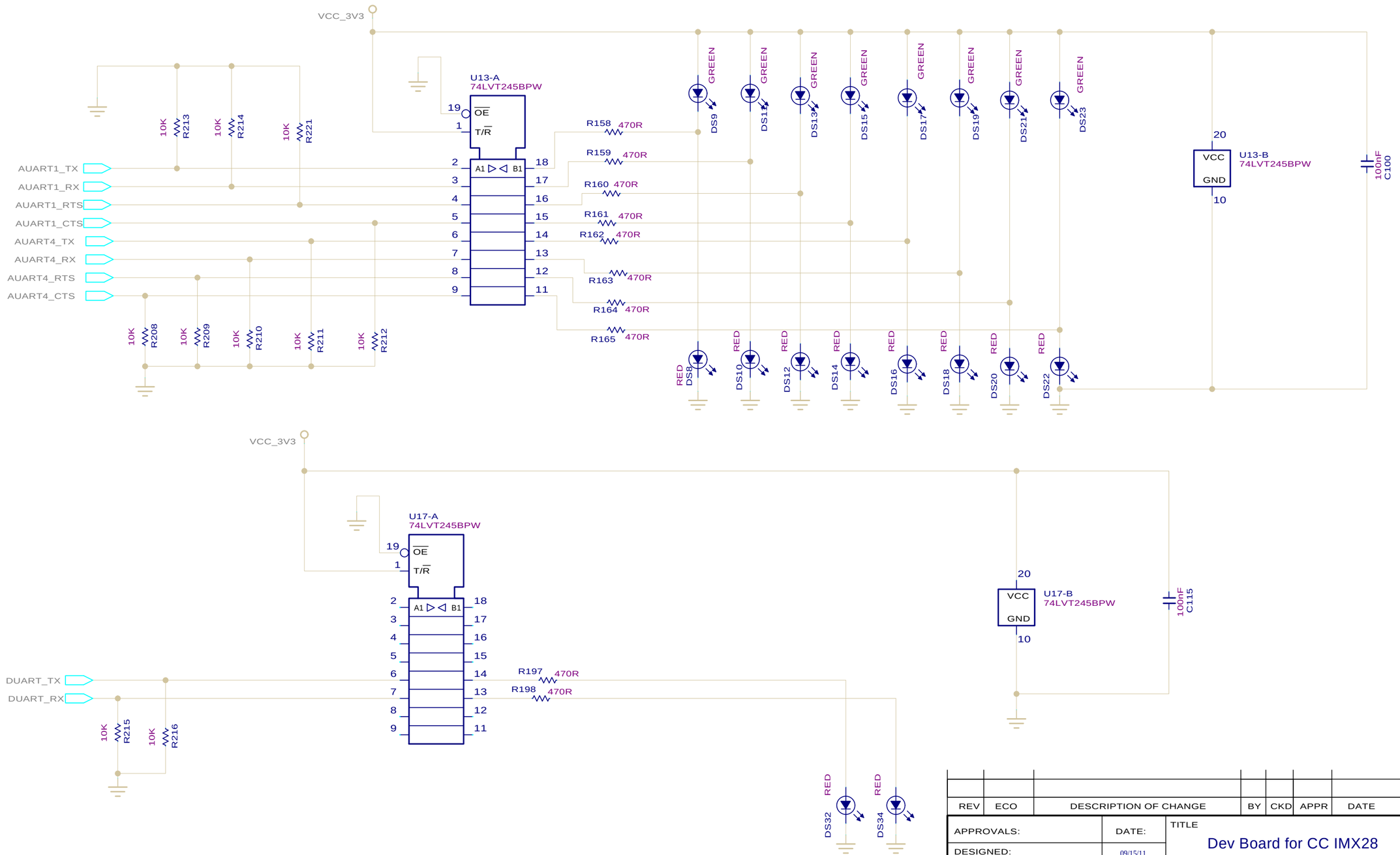

REV	ECO	DESCRIPTION OF CHANGE	BY	CKD	APPR	DATE

APPROVALS:	DATE:
DESIGNED:	09/15/11
DRAWN:	xx/xx/xx
CHECKED:	xx/xx/xx
ENGINEER:	Scott McCall

© Digi International Inc.
All rights reserved

TITLE
Dev Board for CC IMX28
UART LEDs

PART NO. 55001676-01
REV. C

DO NOT SCALE DRAWING
SHEET 11 of 25

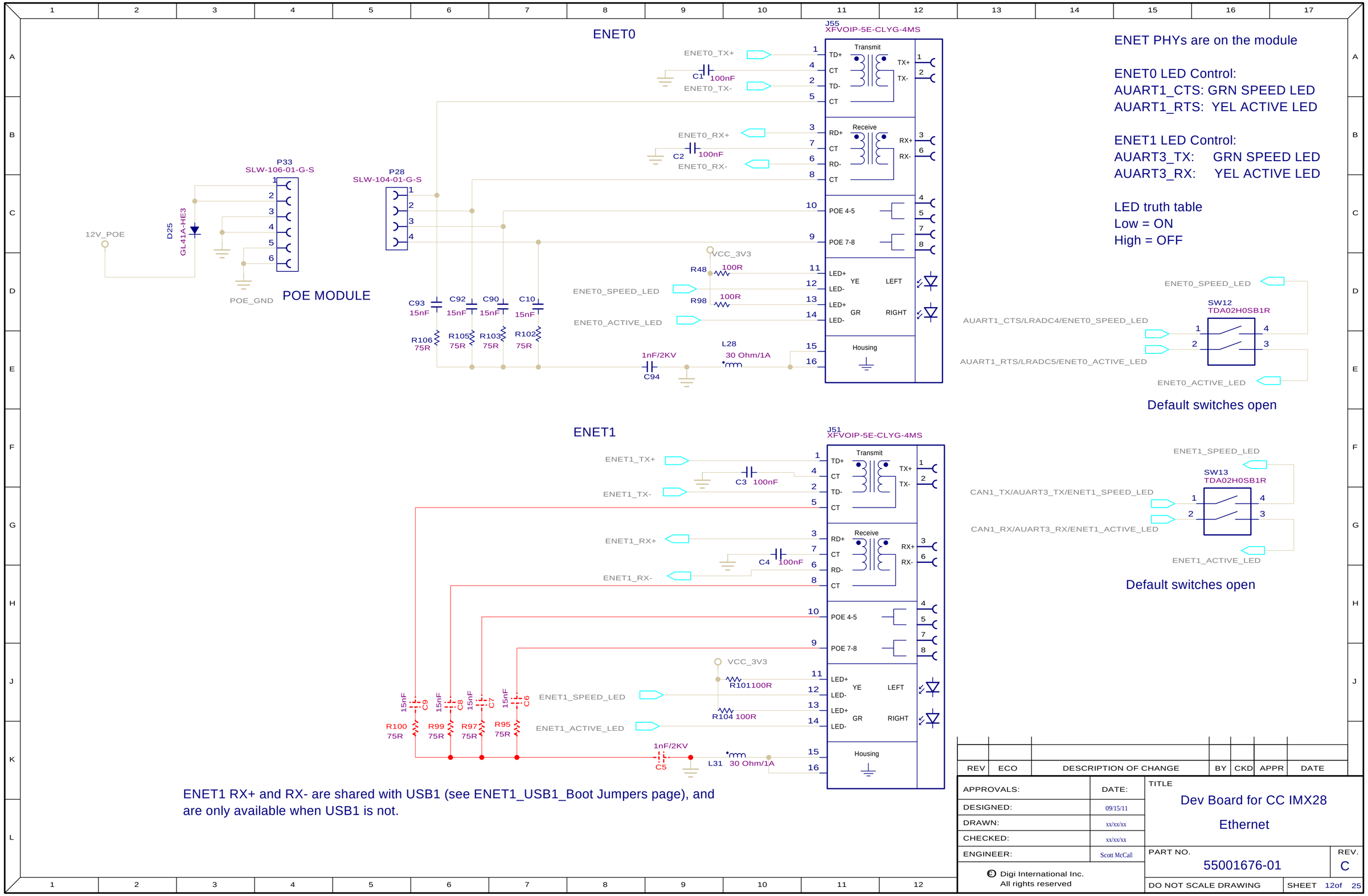

REV	ECO	DESCRIPTION OF CHANGE	BY	CKD	APPR	DATE

APPROVALS:	DATE:
DESIGNED:	09/15/11
DRAWN:	xx/xx/xx
CHECKED:	xx/xx/xx
ENGINEER:	Scott McCall

© Digi International Inc.
All rights reserved

TITLE
Dev Board for CC IMX28
Ethernet

PART NO. 55001676-01
REV. C

DO NOT SCALE DRAWING

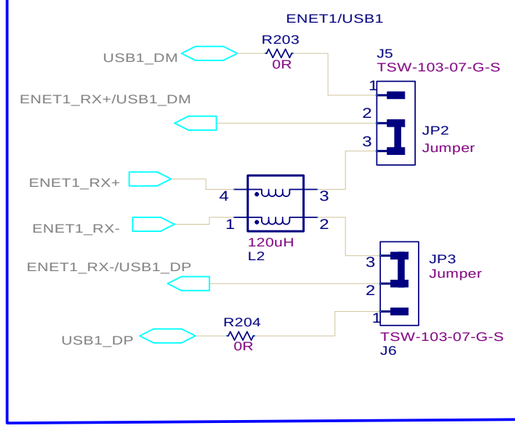

Settings for USB1 and ENET1

Variant	Setting
CC-WMX-PF58-TK-JT	ENET1
CC-WMX-PF58-TK-B	ENET1
CC-WMX-PF58-TK	ENET1
CC-WMX-PF47-VM-B	USB1
CC-WMX-PF47-VM	USB1
CC-WMX-PE47-ZM	USB1
CC-WMX-PE47-VE-B	USB1
CC-WMX-PE47-VE	USB1
CC-WMX-PE47-VM-JT	USB1
CC-WMX-PE47-VM-B	USB1
CC-WMX-PE47-VM	USB1
CC-WMX-PE47-ZM-B	USB1
CC-WMX-PE47-ZM	USB1

IMX28 Boot Mode Config:

Mode	C0	C1	LCD D00	LCD D01	LCD D02	LCD D03	LCD D04	Buffer Enable
NAND FLASH	0	0	T	T	T	T	T	0
USB	0	1	0	0	0	0	X	1
SD	1	0	1	0	0	1	0	1
JTAG	1	1	0	1	1	0	0	1

Module Default is NAND Flash boot
Setting C0, C1 to 0, 0 boots from
Module Defaults by setting all buffers in tri-state.
T= tri-state (high Z)

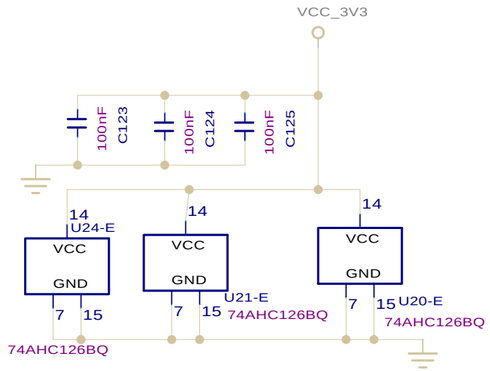

Place 1 Cap by each chip (U7, U11, U20, U21, U23, and U24)

Default switches as shown

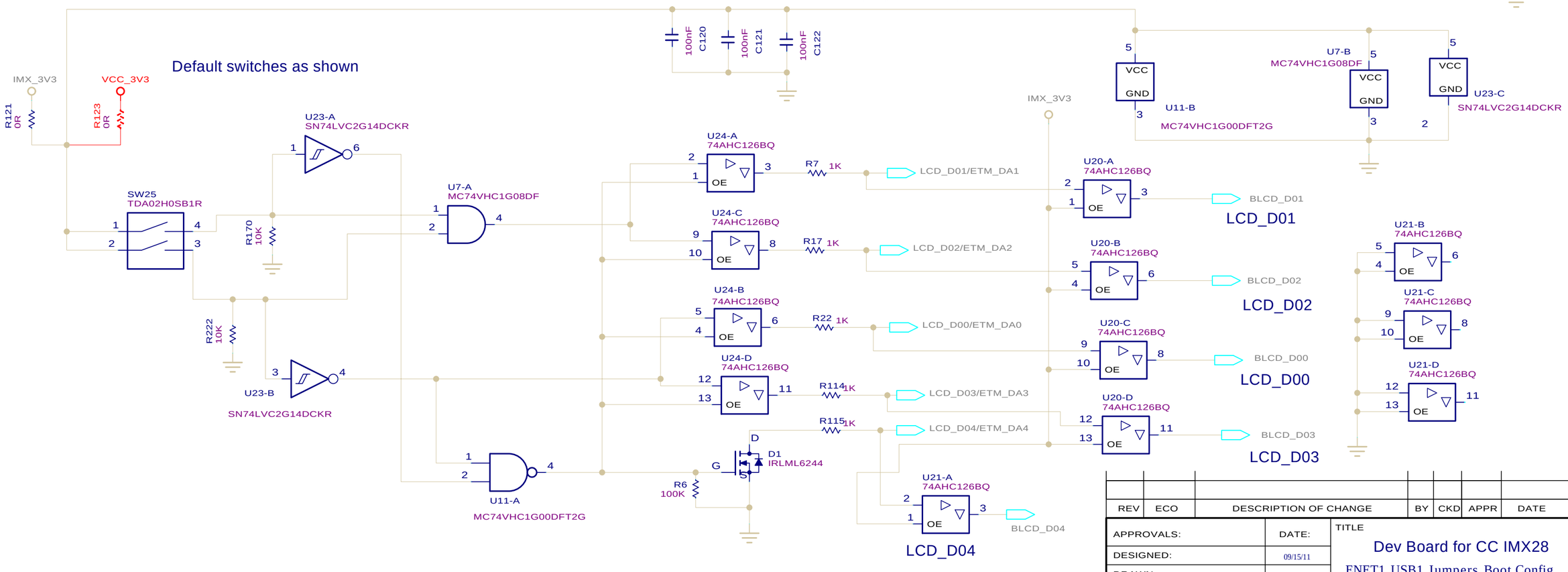

REV	ECO	DESCRIPTION OF CHANGE	BY	CKD	APPR	DATE

APPROVALS:	DATE:
DESIGNED:	09/15/11
DRAWN:	xx/xx/xx
CHECKED:	xx/xx/xx
ENGINEER:	Scott McCall

© Digi International Inc.
All rights reserved

TITLE
Dev Board for CC IMX28
ENET1_USB1 Jumpers_Boot Config

PART NO. 55001676-01
REV. C

DO NOT SCALE DRAWING
SHEET 13of 25

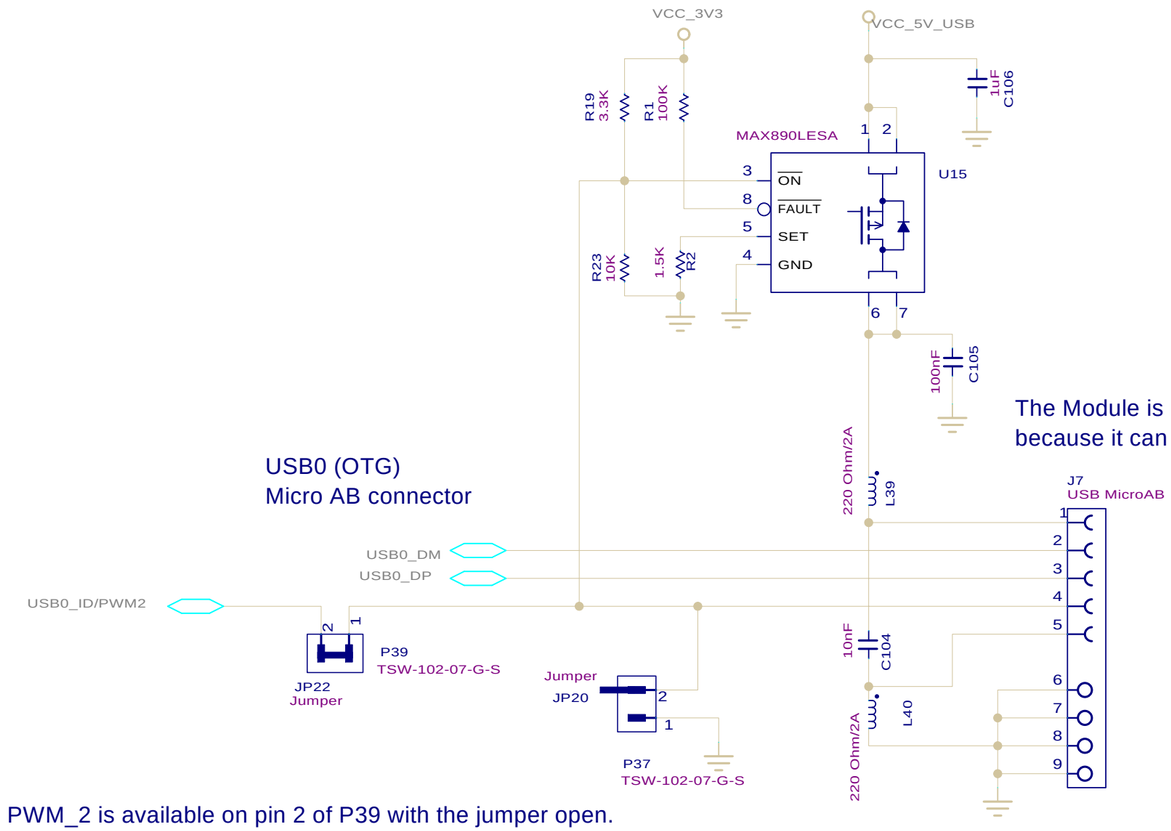

USB0 (OTG)
Micro AB connector

The Module is not powered from the USB because it can pull more than 500mA

PWM_2 is available on pin 2 of P39 with the jumper open.

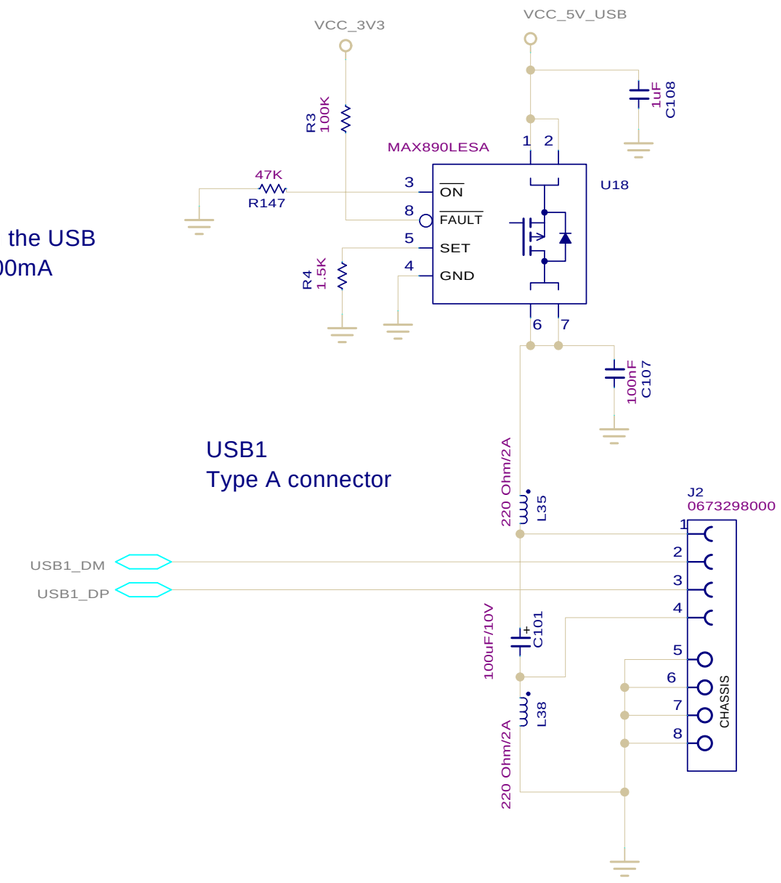

USB1
Type A connector

USB1 is shared with ENET1 RX+ and RX- (see ENET1_USB1_Boot Jumpers page), and is only available when ENET1 is not.

HSADC0

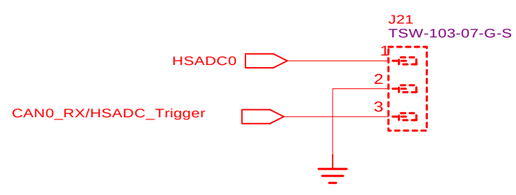

REV	ECO	DESCRIPTION OF CHANGE	BY	CKD	APPR	DATE

APPROVALS:	DATE:
DESIGNED:	09/15/11
DRAWN:	xx/xx/xx
CHECKED:	xx/xx/xx
ENGINEER:	Scott McCall

© Digi International Inc.
All rights reserved

TITLE
Dev Board for CC IMX28
USB_HSADC

PART NO. 55001676-01
REV. C

DO NOT SCALE DRAWING
SHEET 14of 25

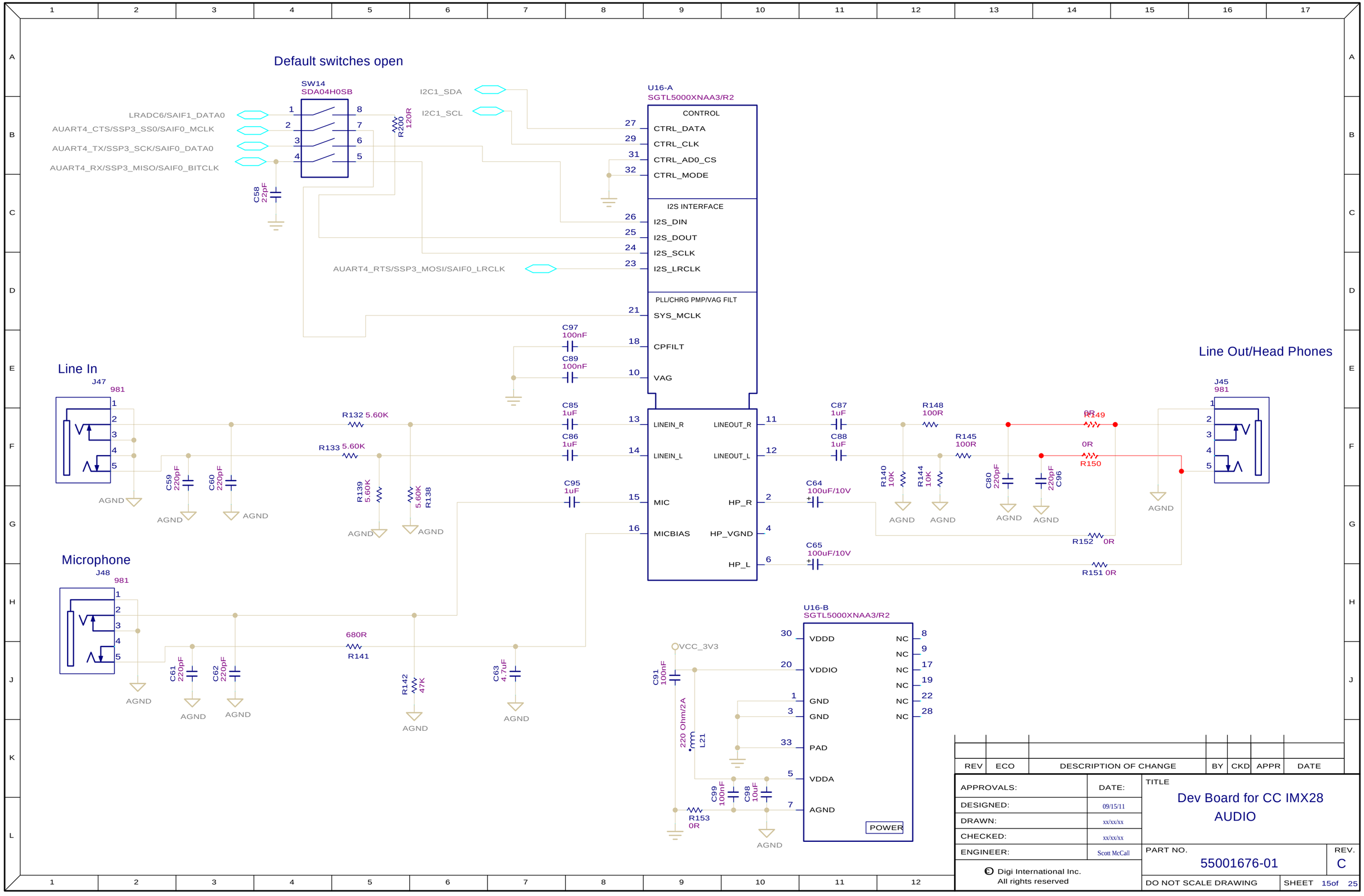
Default switches open
SW14
SDA04H0SB
LRADC6/SAIF1_DATA0
AUART4_CTS/SSP3_SS0/SAIF0_MCLK
AUART4_TX/SSP3_SCK/SAIF0_DATA0
AUART4_RX/SSP3_MISO/SAIF0_BITCLK
C58 22pF
R200 120R
I2C1_SDA
I2C1_SCL
U16-A
SGTL5000XNAA3/R2
CONTROL
CTRL_DATA
CTRL_CLK
CTRL_AD0_CS
CTRL_MODE
I2S INTERFACE
I2S_DIN
I2S_DOUT
I2S_SCLK
I2S_LRCLK
AUART4_RTS/SSP3_MOSI/SAIF0_LRCLK
PLL/CHRG PMP/VAG FILT
SYS_MCLK
CPFILT
VAG
C97 100nF
C89 100nF
Line In
J47
981
R132 5.60K
R133 5.60K
C85 1uF
C86 1uF
C95 1uF
C59 220pF
C60 220pF
R139 5.60K
R138 5.60K
AGND
LINEIN_R
LINEIN_L
MIC
MICBIAS
LINEOUT_R
LINEOUT_L
HP_R
HP_VGND
HP_L
C87 1uF
C88 1uF
C64 100uF/10V
C65 100uF/10V
R148 100R
R145 100R
R140 10K
R144 10K
C80 220pF
C96 220pF
R149 0R
R150 0R
R152 0R
R151 0R
Line Out/Head Phones
J45
981
Microphone
J48
981
680R
R141
C61 220pF
C62 220pF
R142 47K
C63 4.7uF
U16-B
SGTL5000XNAA3/R2
VCC_3V3
C91 100nF
220 Ohm/2A
L21
C99 100nF
C98 10uF
R153 0R
VDDD
VDDIO
GND
PAD
VDDA
NC
POWER
REV
ECO
DESCRIPTION OF CHANGE
BY
CKD
APPR
DATE
APPROVALS:
DATE:
DESIGNED:
09/15/11
DRAWN:
xx/xx/xx
CHECKED:
xx/xx/xx
ENGINEER:
Scott McCall
TITLE
Dev Board for CC IMX28
AUDIO
PART NO.
55001676-01
REV.
C
DO NOT SCALE DRAWING
SHEET 15of 25
© Digi International Inc.
All rights reserved

MICRO SD Card Socket

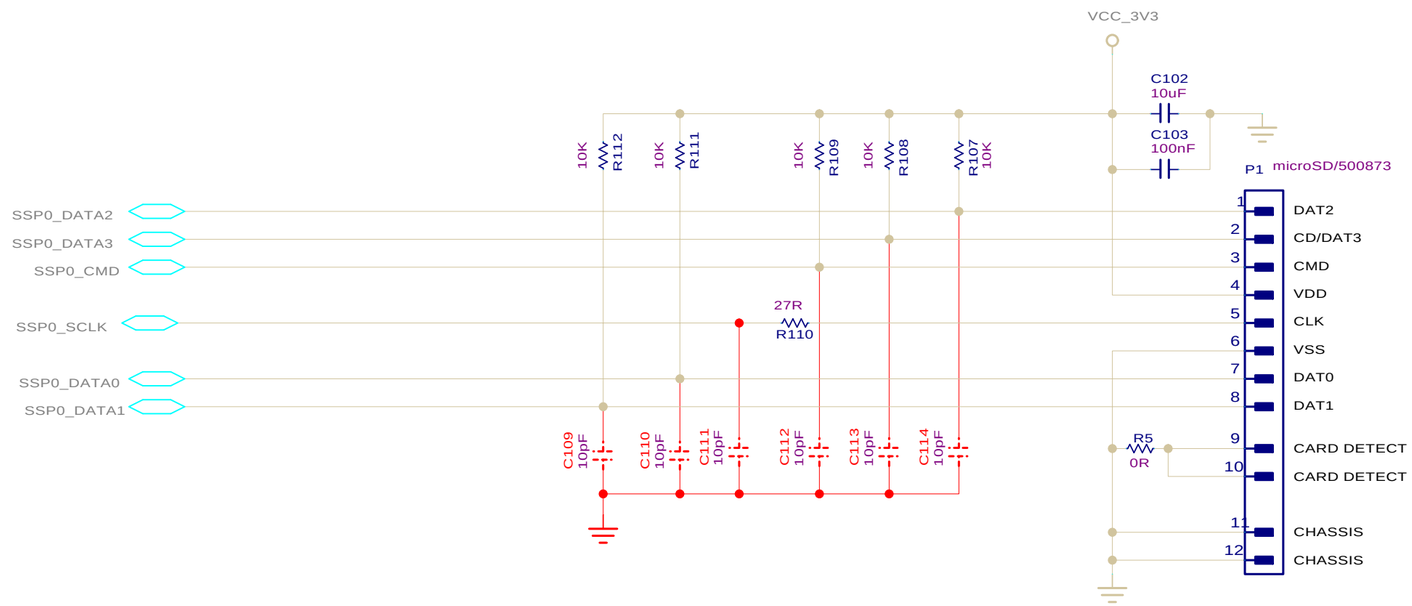

REV	ECO	DESCRIPTION OF CHANGE	BY	CKD	APPR	DATE

APPROVALS:	DATE:
DESIGNED:	09/15/11
DRAWN:	xx/xx/xx
CHECKED:	xx/xx/xx
ENGINEER:	Scott McCall

© Digi International Inc.
All rights reserved

TITLE
Dev Board for CC IMX28
SD-CARD

PART NO. 55001676-01
REV. C

DO NOT SCALE DRAWING

CAN0

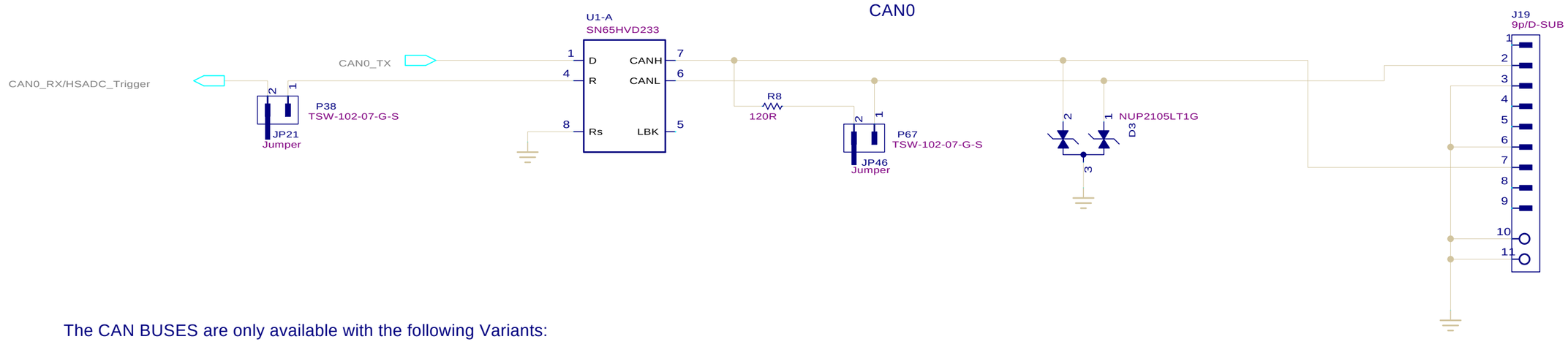

The CAN BUSES are only available with the following Variants:
CC-WMX-PF58-TK-JT
CC-WMX-PF58-TK-B
CC-WMX-PF58-TK
CC-WMX-PF47-VM-B
CC-WMX-PF47-VM
CC-WMX-PE47-ZM

CAN1

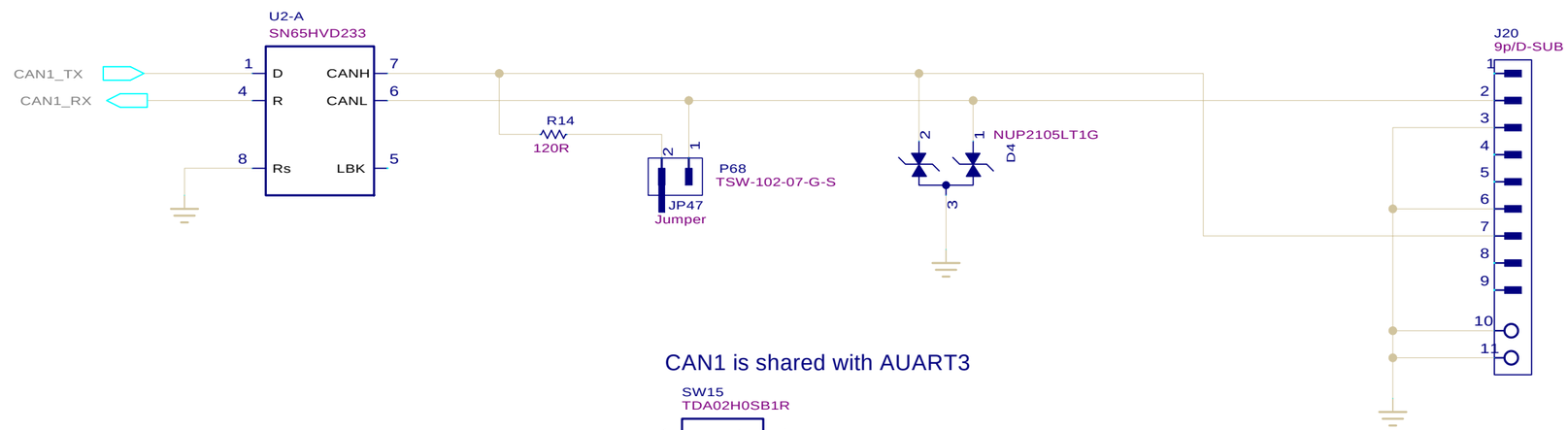

CAN1 is shared with AUART3

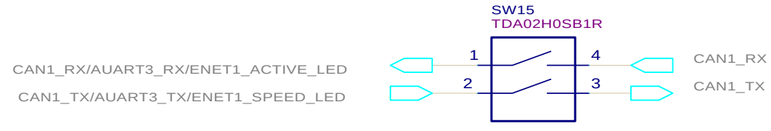

Default switches open

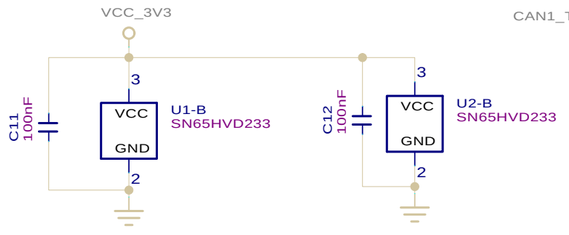

REV	ECO	DESCRIPTION OF CHANGE	BY	CKD	APPR	DATE

APPROVALS:	DATE:	TITLE Dev Board for CC IMX28 CAN
DESIGNED:	09/15/11	
DRAWN:	xx/xx/xx	
CHECKED:	xx/xx/xx	
ENGINEER:	Scott McCall	PART NO. 55001676-01 — REV. C
		DO NOT SCALE DRAWING — SHEET 17of 25

© Digi International Inc.
All rights reserved

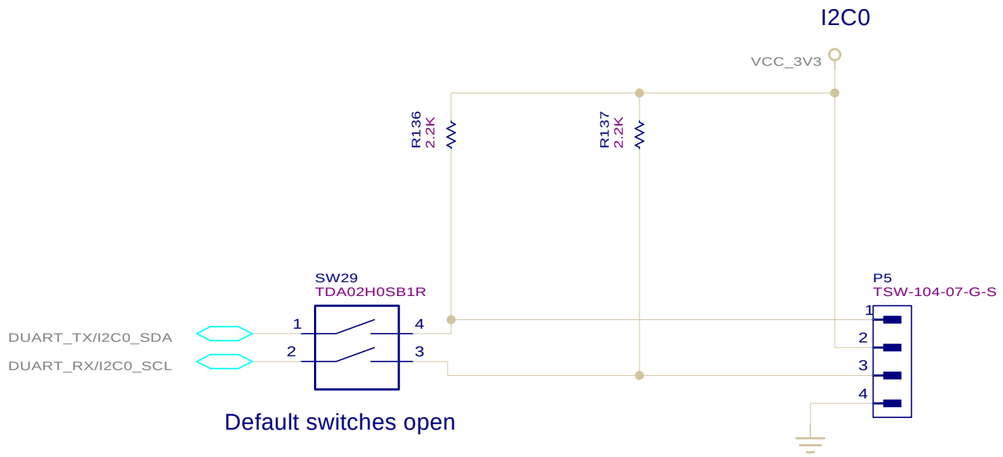

Default switches open

DUART and I2C0 are software selectable

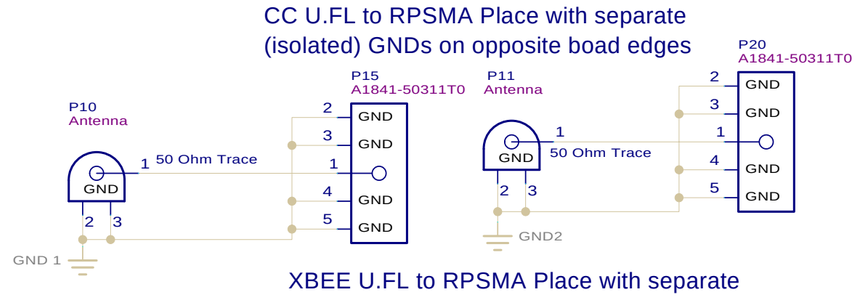

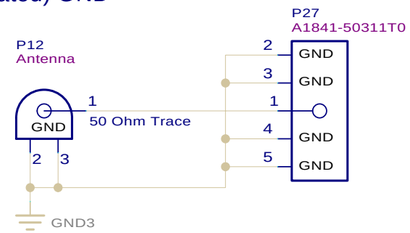

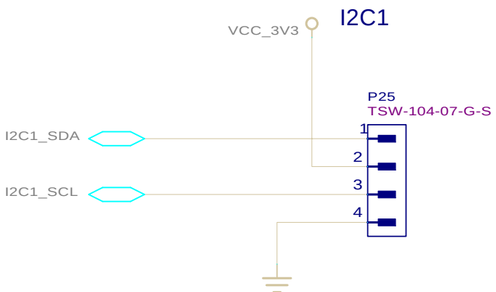

I2C1 can also be used as the DUART (software selectable)
Pull up resistors are on the module

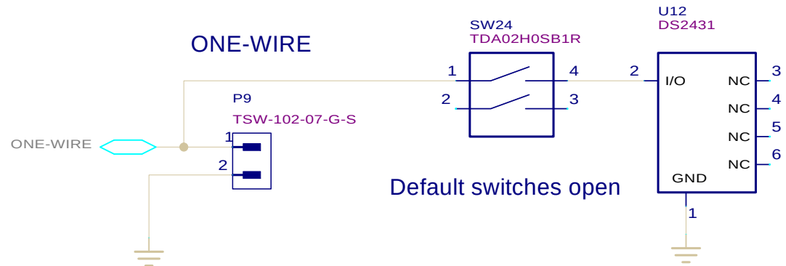

Default switches open

One-Wire charges to 3.3V

One-Wire EEPROM

REV	ECO	DESCRIPTION OF CHANGE	BY	CKD	APPR	DATE

APPROVALS:	DATE:
DESIGNED:	09/15/11
DRAWN:	xx/xx/xx
CHECKED:	xx/xx/xx
ENGINEER:	Scott McCall

© Digi International Inc.
All rights reserved

TITLE
Dev Board for CC IMX28
I2C, 1-Wire, U.FL

PART NO. 55001676-01
REV. C

DO NOT SCALE DRAWING

SPI1

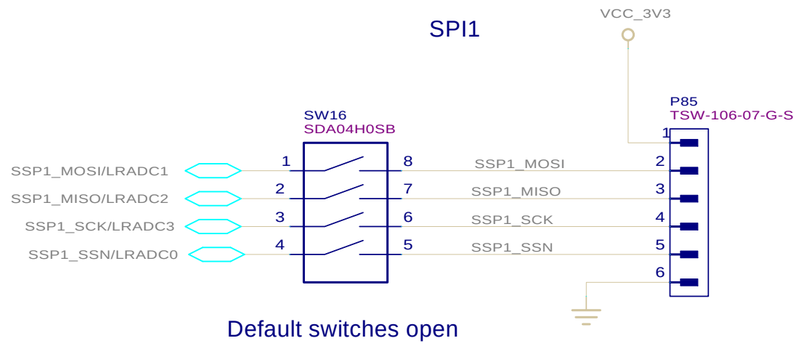

Default switches open

SSP1 is shared with LRADC0, 1, 2, and 3.
LRADC 4 and 5 are shared with AUART1 CTS and RTS on the following Variants:
CC-WMX-PF58-TK-JT
CC-WMX-PF58-TK-B
CC-WMX-PF58-TK
CC-WMX-PF47-VM-B
CC-WMX-PF47-VM
CC-WMX-PE47-ZM
LRADC 6 is shared with AUART3 TX

SSP3 is shared with AUART4. SSP3 is only available on the following Variants:
CC-WMX-PF58-TK-JT
CC-WMX-PF58-TK-B
CC-WMX-PF58-TK
CC-WMX-PF47-VM-B
CC-WMX-PF47-VM
CC-WMX-PE47-ZM

SPI3

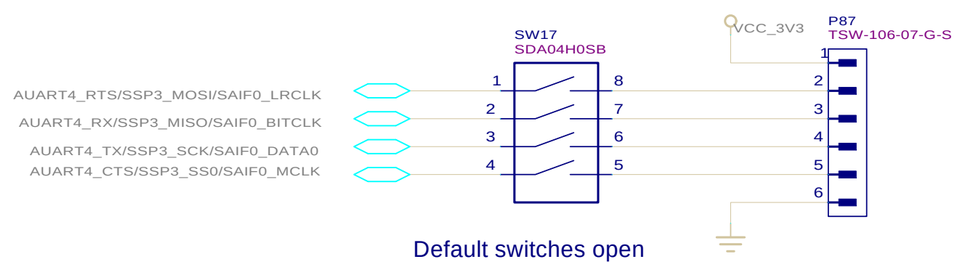

Default switches open

REV	ECO	DESCRIPTION OF CHANGE	BY	CKD	APPR	DATE

APPROVALS:	DATE:
DESIGNED:	09/15/11
DRAWN:	xx/xx/xx
CHECKED:	xx/xx/xx
ENGINEER:	Scott McCall

© Digi International Inc.
All rights reserved

TITLE
Dev Board for CC IMX28
SPI Headers

PART NO. 55001676-01
REV. C

DO NOT SCALE DRAWING

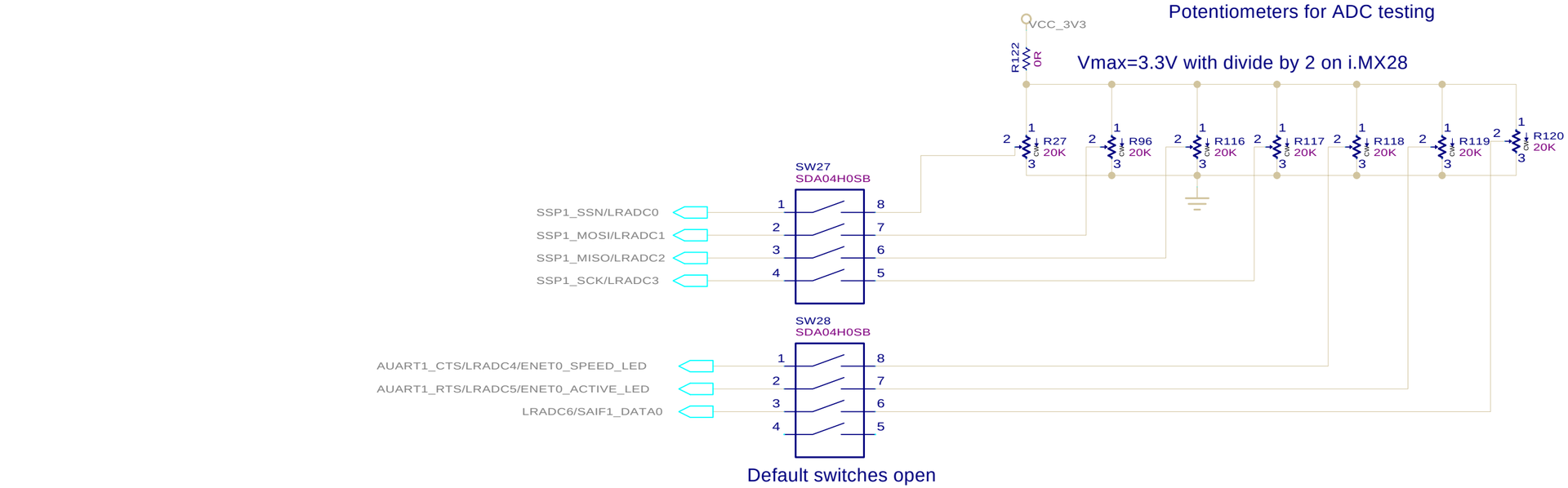

LRADC[0-6]

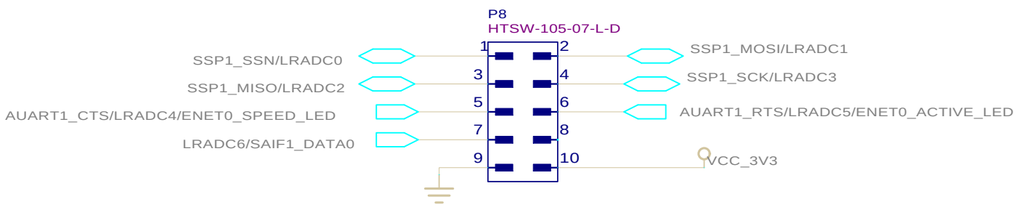

SSP1 is shared with LRADC0, 1, 2, and 3.
LRADC 4 and 5 are shared with AUART1 CTS and RTS on the following Variants:
CC-WMX-PF58-TK-JT
CC-WMX-PF58-TK-B
CC-WMX-PF58-TK
CC-WMX-PF47-VM-B
CC-WMX-PF47-VM
CC-WMX-PE47-ZM
LRADC 6 is shared with AUART3 TX

REV	ECO	DESCRIPTION OF CHANGE	BY	CKD	APPR	DATE

APPROVALS:	DATE:
DESIGNED:	09/15/11
DRAWN:	xx/xx/xx
CHECKED:	xx/xx/xx
ENGINEER:	Scott McCall

© Digi International Inc.
All rights reserved

TITLE
Dev Board for CC IMX28
LRADC Header and POTs

PART NO. 55001676-01
REV. C

DO NOT SCALE DRAWING
SHEET 20of 25

User Buttons

These connections come through AUART2_RTS, and SSP0_CARD_DETECT

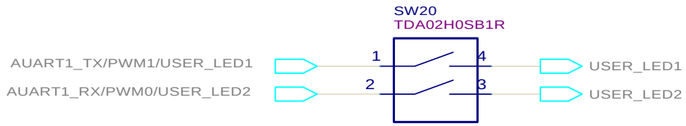

Default switches open

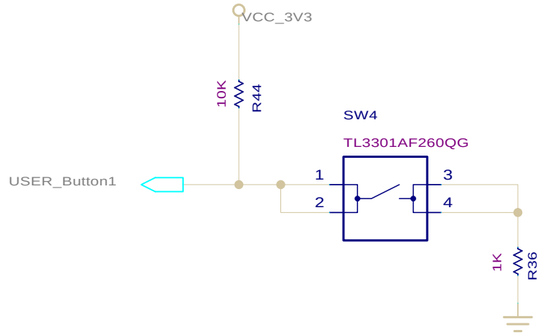

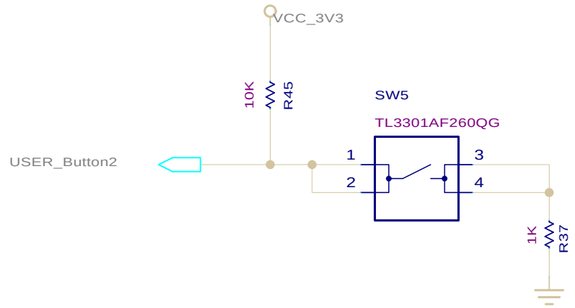

User LEDs

Connected to UART4_CTS and UART4_RTS (PWM3 and PWM5 respectively)

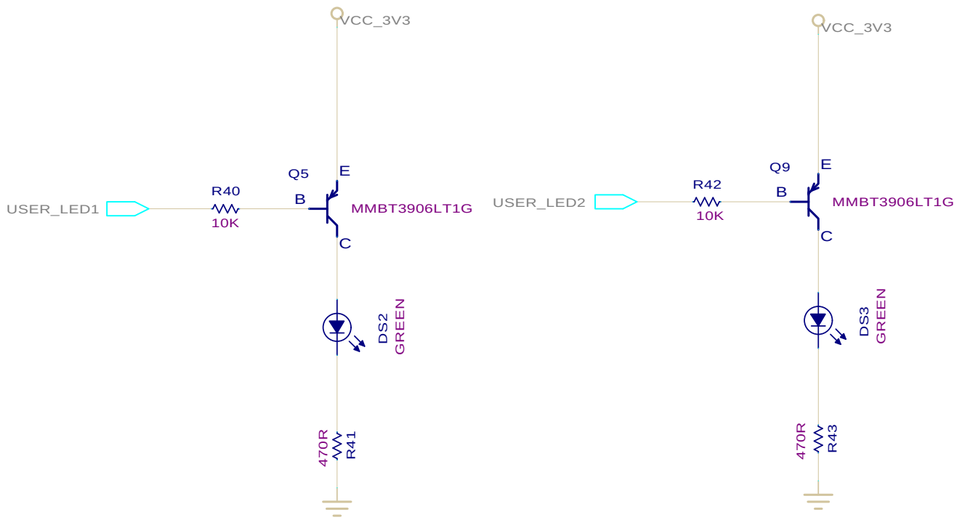

REV	ECO	DESCRIPTION OF CHANGE	BY	CKD	APPR	DATE

APPROVALS:	DATE:
DESIGNED:	09/15/11
DRAWN:	xx/xx/xx
CHECKED:	xx/xx/xx
ENGINEER:	Scott McCall

© Digi International Inc.
All rights reserved

TITLE
Dev Board for CC IMX28
User LEDs and Buttons

PART NO. 55001676-01
REV. C

DO NOT SCALE DRAWING

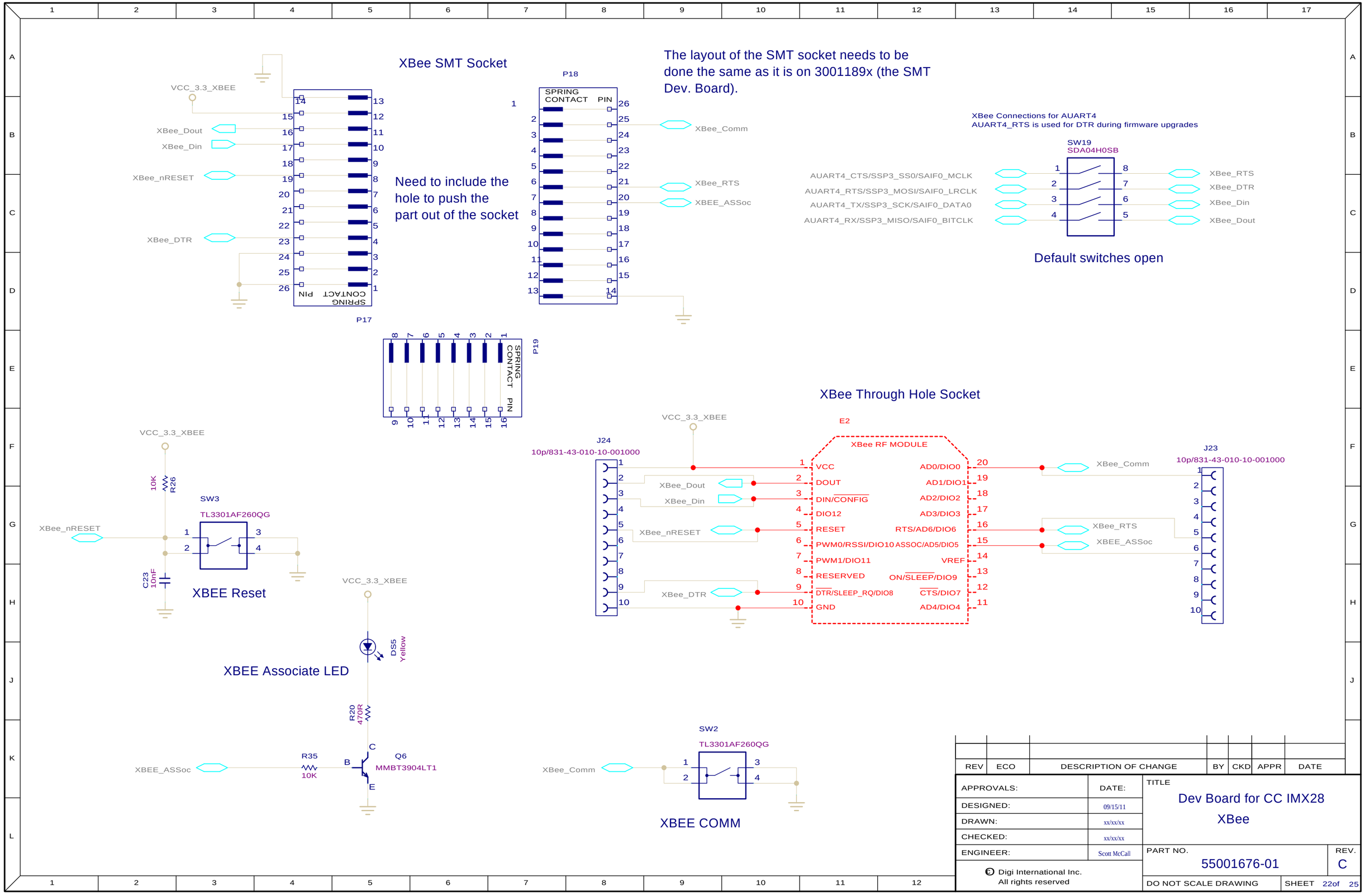
XBee SMT Socket
The layout of the SMT socket needs to be done the same as it is on 3001189x (the SMT Dev. Board).
Need to include the hole to push the part out of the socket
P17
P18
P19
SPRING CONTACT
PIN
VCC_3.3_XBEE
XBee_Dout
XBee_Din
XBee_nRESET
XBee_DTR
XBee_Comm
XBee_RTS
XBEE_ASSoc
XBee Connections for AUART4
AUART4_RTS is used for DTR during firmware upgrades
SW19
SDA04H0SB
AUART4_CTS/SSP3_SS0/SAIF0_MCLK
AUART4_RTS/SSP3_MOSI/SAIF0_LRCLK
AUART4_TX/SSP3_SCK/SAIF0_DATA0
AUART4_RX/SSP3_MISO/SAIF0_BITCLK
Default switches open
XBee Through Hole Socket
E2
XBee RF MODULE
J24
10p/831-43-010-10-001000
J23
VCC
DOUT
DIN/CONFIG
DIO12
RESET
PWM0/RSSI/DIO10
PWM1/DIO11
RESERVED
DTR/SLEEP_RQ/DIO8
GND
AD0/DIO0
AD1/DIO1
AD2/DIO2
AD3/DIO3
RTS/AD6/DIO6
ASSOC/AD5/DIO5
VREF
ON/SLEEP/DIO9
CTS/DIO7
AD4/DIO4
10K
R26
SW3
TL3301AF260QG
C23
10nF
XBEE Reset
DS5
Yellow
XBEE Associate LED
R20
470R
R35
10K
Q6
MMBT3904LT1
SW2
XBEE COMM
REV
ECO
DESCRIPTION OF CHANGE
BY
CKD
APPR
DATE
APPROVALS:
DATE:
DESIGNED:
09/15/11
DRAWN:
xx/xx/xx
CHECKED:
xx/xx/xx
ENGINEER:
Scott McCall
TITLE
Dev Board for CC IMX28
XBee
PART NO.
55001676-01
REV.
C
DO NOT SCALE DRAWING
SHEET 22of 25
© Digi International Inc.
All rights reserved

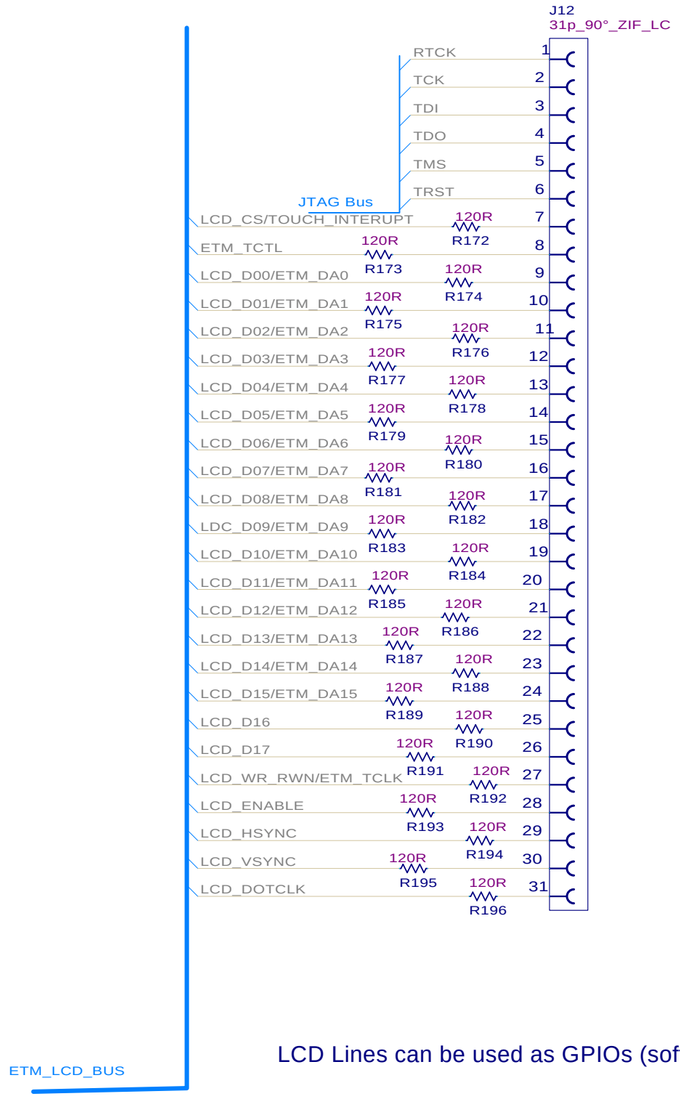

LCD Lines can be used as GPIOs (software selectable)

REV	ECO	DESCRIPTION OF CHANGE	BY	CKD	APPR	DATE

APPROVALS:	DATE:
DESIGNED:	09/15/11
DRAWN:	xx/xx/xx
CHECKED:	xx/xx/xx
ENGINEER:	Scott McCall

© Digi International Inc.
All rights reserved

TITLE
Dev Board for CC IMX28
LCD, ETM Input Connector

PART NO. 55001676-01 REV. C

DO NOT SCALE DRAWING

LCD Connector

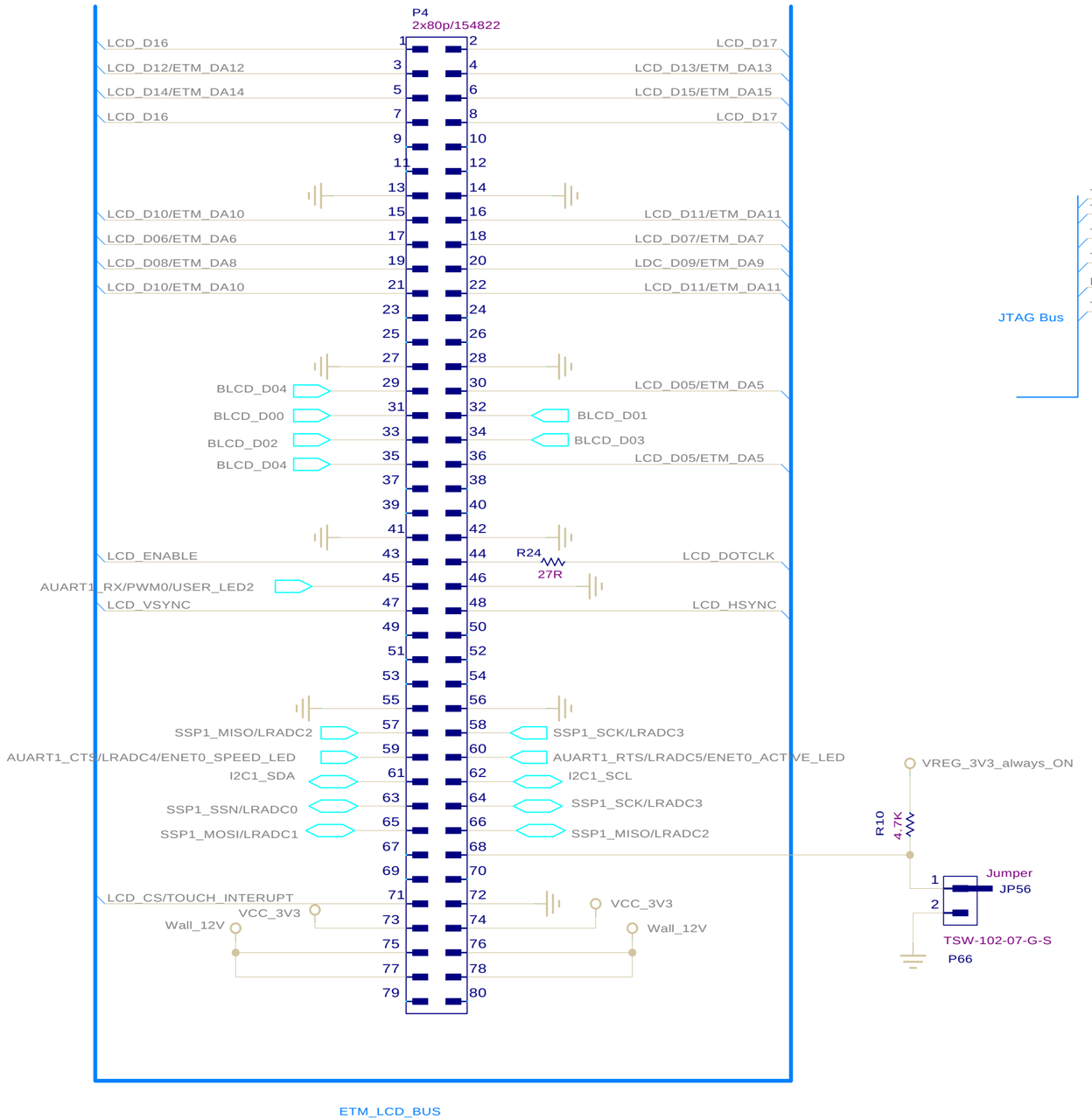

JTAG Connector

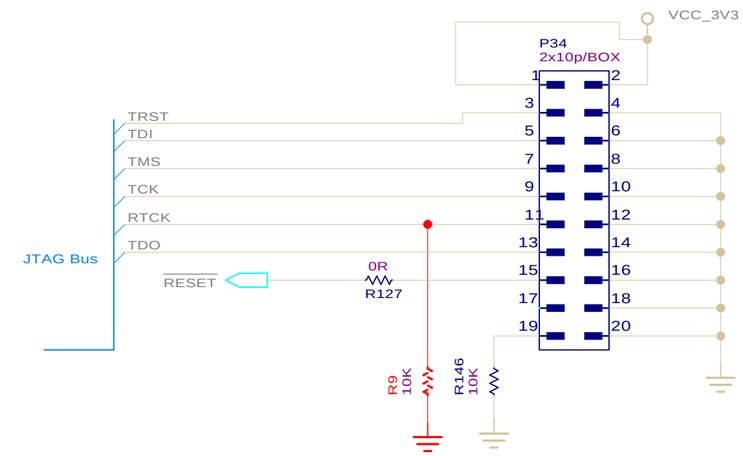

SSP1 is used for Touch Screen and SPI functions

Pin	Function
57	LRADC2
58	LRADC3
63	SSP1_SSN
64	SSP1_SK
65	SSP1_MOSI
66	SSP1_MISO

CPU or SPI Touch Screen
Jumper open CPU Touch Controller
Jumper Shorted SPI Touch Controller

REV	ECO	DESCRIPTION OF CHANGE	BY	CKD	APPR	DATE

APPROVALS:	DATE:	TITLE: Dev Board for CC IMX28 LCD and JTAG
DESIGNED:	09/15/11	
DRAWN:	xx/xx/xx	
CHECKED:	xx/xx/xx	
ENGINEER:	Scott McCall	PART NO. 55001676-01 — REV. C

© Digi International Inc.
All rights reserved

DO NOT SCALE DRAWING — SHEET 24 of 25

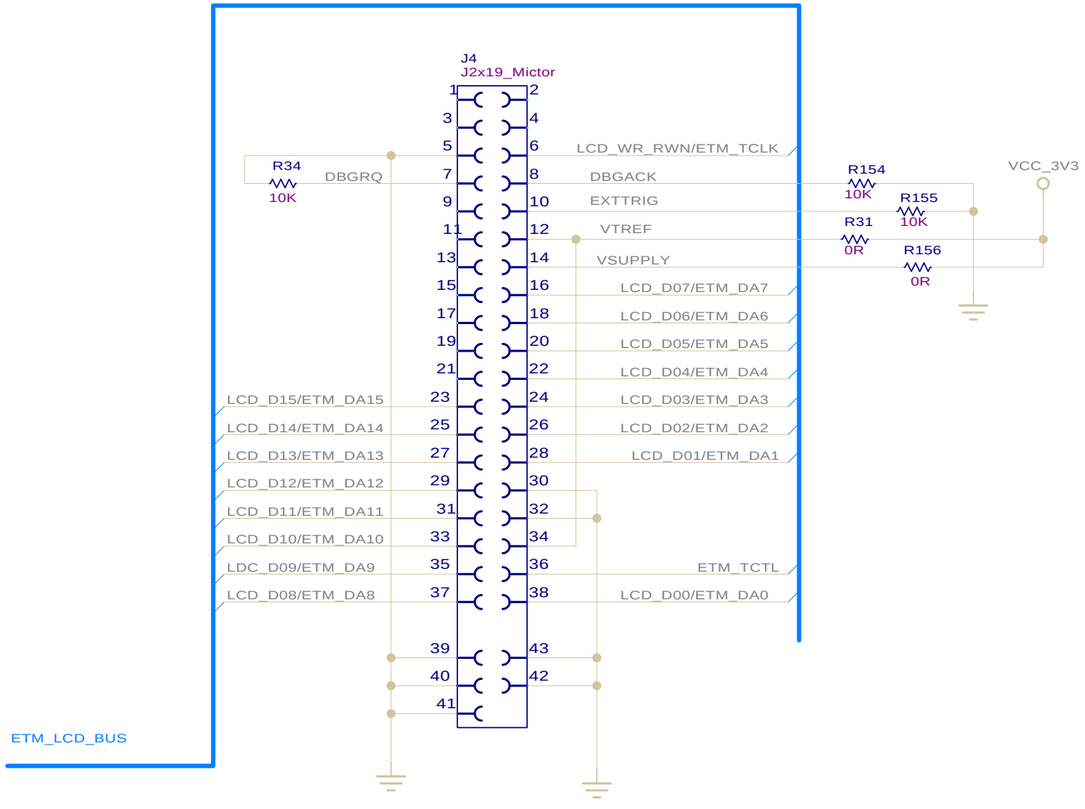

REV	ECO	DESCRIPTION OF CHANGE	BY	CKD	APPR	DATE

APPROVALS:	DATE:
DESIGNED:	09/15/11
DRAWN:	xx/xx/xx
CHECKED:	xx/xx/xx
ENGINEER:	Scott McCall

TITLE
Dev Board for CC IMX28
ETM Connector

PART NO. 55001676-01
REV. C

© Digi International Inc.
All rights reserved

DO NOT SCALE DRAWING

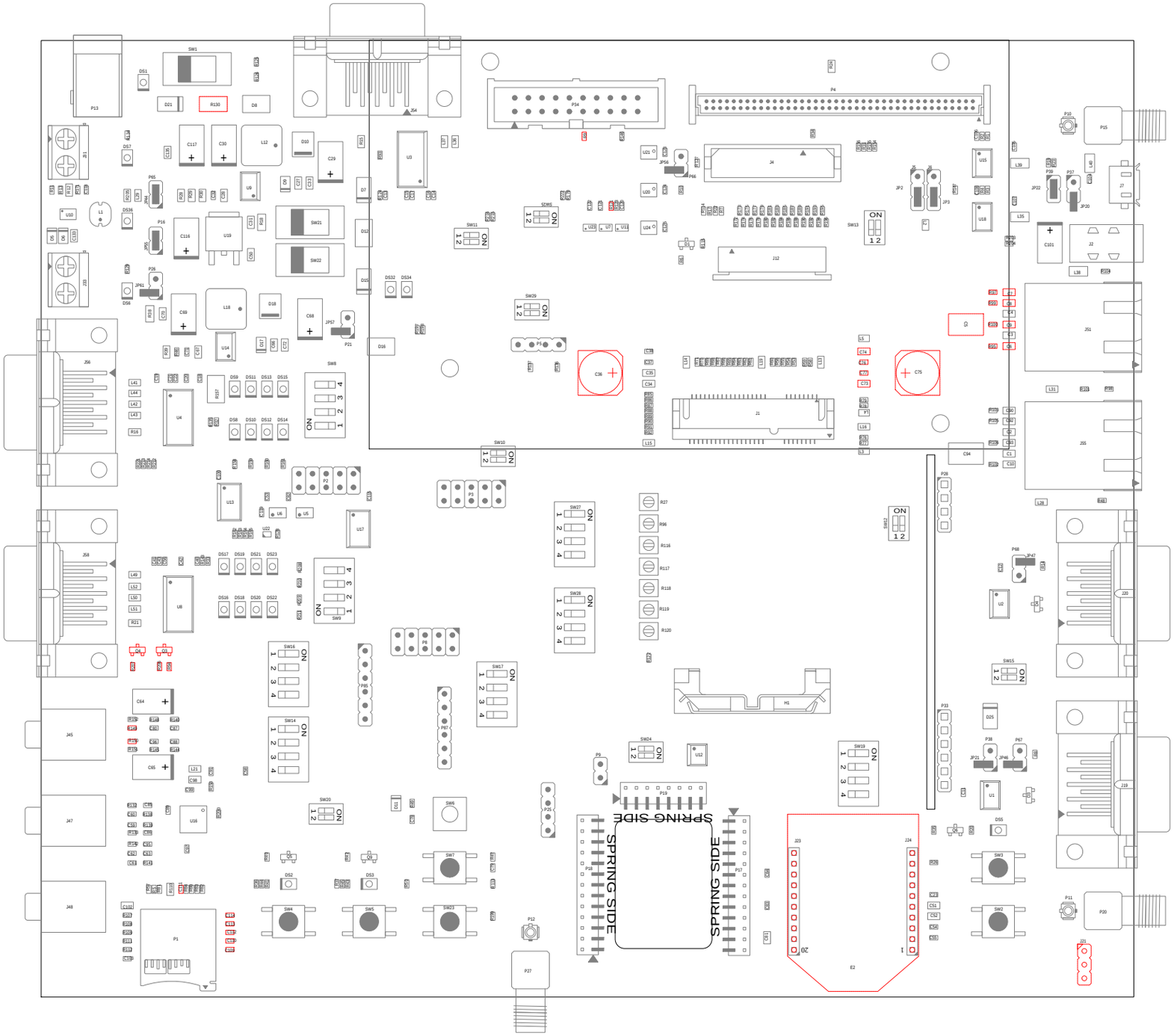

REV	ECO	DESCRIPTION OF CHANGE	BY	CKD	APPR	DATE

APPROVALS:	DATE:	TITLE Dev Board for CC IMX28 TOP ASSEMBLY
DESIGNED:		
DRAWN:		
CHECKED:		
ENGINEER:		PART NO. 55001676-01 — REV. C
© Digi International Inc.		DO NOT SCALE DRAWING — SHEET 1 OF 2

All rights reserved

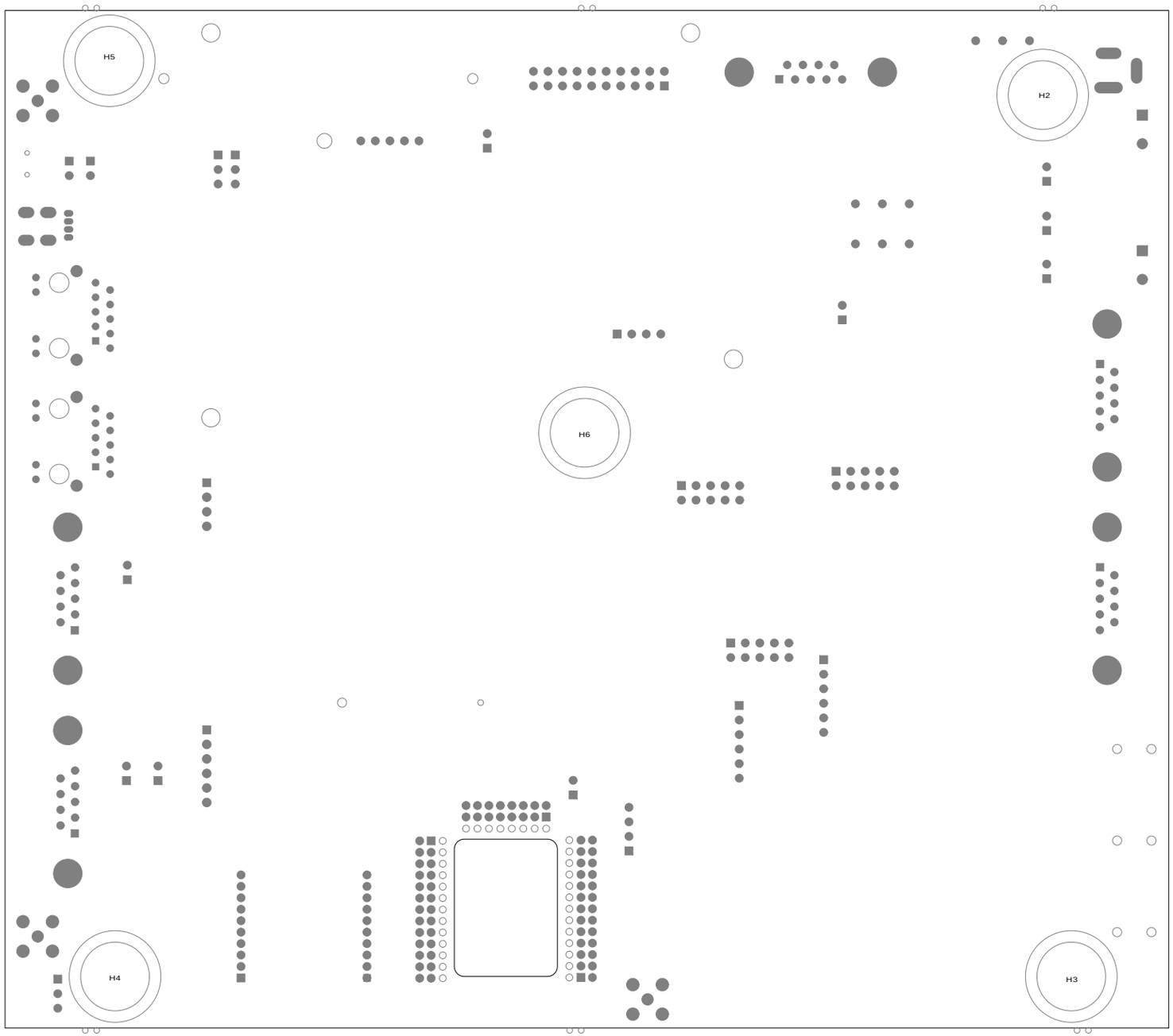

REV	ECO	DESCRIPTION OF CHANGE	BY	CKD	APPR	DATE

APPROVALS:	DATE:
DESIGNED:	
DRAWN:	
CHECKED:	
ENGINEER:	

TITLE

Dev Board for CC IMX28

BOTTOM ASSEMBLY

PART NO. 55001676-01

REV. C

©Digi International Inc.
All rights reserved

DO NOT SCALE DRAWING

SHEET 2 OF 2