COPYRIGHT © 2020 DIGI INTERNATIONAL,
UNPUBLISHED WORK - ALL RIGHTS RESERVED.

BALLOON DESIGNATION SYMBOL
1 ← ITEM NUMBER
2 ← NOTE REFERENCE

THIS DOCUMENT CONTAINS PROPRIETARY INFORMATION AND EXCEPT WITH WRITTEN PERMISSION OF DIGI, SUCH INFORMATION SHALL NOT BE PUBLISHED OR DISCLOSUED TO OTHERS, OR USED FOR ANY PURPOSE AND THE DOCUMENT SHALL NOT BE COPIED IN WHOLE OR PART

REVISION HISTORY

REV	ECO	DESCRIPTION	DATE	DRW/CHK
7P	–	initial version of the design	2/26/2020	–

NOTES UNLESS OTHERWISE SPECIFIED

1. ASSEMBLY TORQUE VALUES:
   #4-40 SCREWS: 6.5±0.5 IN-LBS
   #3-32 SCREWS: 8.0±0.5 IN-LBS
2. INSTALL FOR MANUFACTURER'S RECOMMENDATIONS.
3. WORKMANSHIP SHALL BE ROHS COMPLIANT PER 2011/65/EU. THE FACILITY PERFORMING THIS WORK SHALL PERFORM TESTS OR OBTAIN TESTING. INFORMATION THAT CONFIRMS COMPLIANCE. TEST RECORDS SHALL BE MADE AVALIABLE UPON REQUEST.

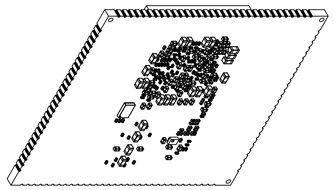

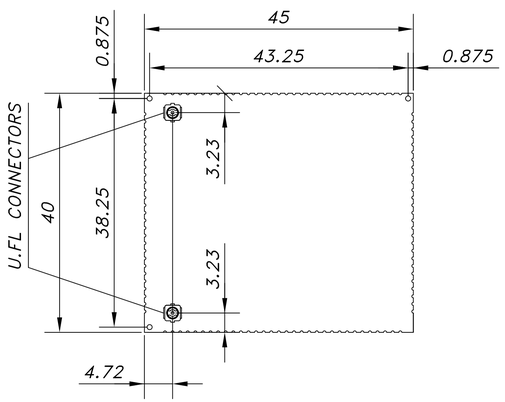

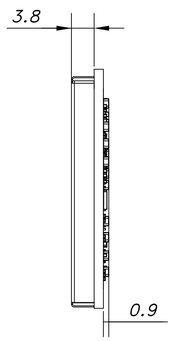

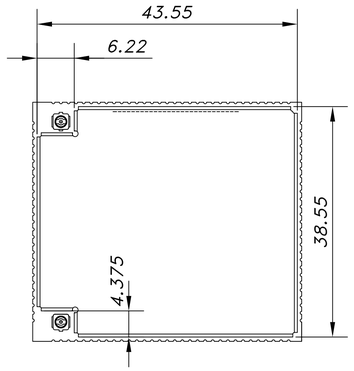

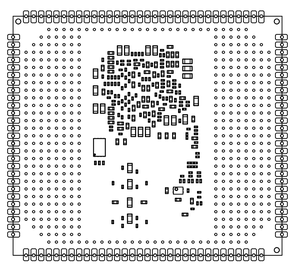

NOTE:
The shield has been removed from this view better visibility of dimensions.

UNLESS OTHERWISE SPECIFIED

ALL DIMENSIONS AND TOLERENCES ARE IN MILLIMETERS AND SHALL BE INTERPRETED PER ASME Y14.5M - 1994

DRAWING TOLERANCES ARE AS FOLLOWS:

FRACTIONS	DECIMALS	ANGLES
± 1/64	.X ± .5	± 1°
	.XX ± .1	
	.XXX ± .005	

THIRD ANGLE PROJECTION

DESIGNER/ENGINEER: SME	DATE: 1/22/2019	DIGI INTERNATIONAL, 9350 EXCELSIOR BLVD., SUITE 700, HOPKINS, MN. 55343
HW ENGINEER: SME	DATE: 1/22/2019	TITLE: ConnectCore 8X SoM
MFG/OPS:	DATE: 1/22/2019	
DRAFTER:	DATE: 1/22/2019	
PRODUCT MANAGER:	DATE: 1/22/2019	

SIZE	CAGE CODE	DWG NO:	REV
D	08TP3	55001984-XX	5P

SCALE: DO NOT SCALE DRAWING — SHEET 1 OF 1